VARIAN 936 LEAK DETECTOR

INSTRUCTION MANUAL

PHILIPS COMPONENTS (PHILS.) INC.
MANILA
RECEIVED
OCT 09 1985
MCSD

936-60

936-65

936-70

VARIAN I.E.G.
VACUUM DIVISION
121 Hartwell Avenue
Lexington, Massachusetts 02173
(617) 861-7200

Manual Part Number
0981-6999-09-425
Edition 4 August 1978

Warranty

Products manufactured by Seller are warranted against defects in materials and workmanship for twelve (12) months from date of shipment thereof to Customer, and Seller's liability under valid warranty claims is limited, at the option of Seller, to repair, replacement, or refund of an equitable portion of the purchase price of the Product. Items expendable in normal use are not covered by this warranty. All warranty replacement or repair of parts shall be limited to equipment malfunctions which, in the sole opinion of Seller, are due or traceable to defects in original materials or workmanship. All obligations of Seller under this warranty shall cease in the event of abuse, accident, alteration, misuse or neglect of the equipment. In-warranty repaired or replacement parts are warranted only for the remaining unexpired portion of the original warranty period applicable to the repaired or replaced parts. After expiration of the applicable warranty period, Customer shall be charged at the then current prices for parts, labor, and transportation.

Reasonable care must be used to avoid hazards. Seller expressly disclaims responsibility for loss or damage caused by use of its Products other than in accordance with proper operating procedures.

Except as stated herein, Seller makes no warranty, express or implied (either in fact or by operation of law), statutory or otherwise; and, except as stated herein, Seller shall have no liability under any warranty, express or implied (either in fact or by operation of law), statutory or otherwise. Statements made by any person, including representatives of Seller, which are inconsistent or in conflict with the terms of this warranty shall not be binding upon Seller unless reduced to writing and approved by an officer of Seller.

Warranty Replacement and Adjustment

All claims under warranty must be made promptly after occurrence of circumstances giving rise thereto, and must be received within the applicable warranty period by Seller or its authorized representative. Such claims should include the Product serial number, the date of shipment, and a full description of the circumstances giving rise to the claim. Before any Products are returned for repair and/or adjustment, written authorization from Seller or its authorized representative for the return and instructions as to how and where these Products should be returned must be obtained. Any Product returned to Seller for examination shall be sent prepaid via the means of transportation indicated as acceptable by seller. Seller reserves the right to reject any warranty claim not promptly reported and any warranty claim on any item that has been altered or has been returned by non-acceptable means of transportation. When any Product is returned for examination and inspection, or for any other reason, Customer shall be responsible for all damage resulting from improper packing or handling, and for loss in transit, notwithstanding any defect or non-conformity in the Product, in all cases Seller has sole responsibility for determining the cause and nature of failure, and Seller's determination with regard thereto shall be final.

If it is found that Seller's Product has been returned without cause and is still serviceable, Customer will be notified and the Product returned at its expense; in addition, a charge for testing and examination may be made on Products so returned.

Varian I.E.G.
Vacuum Division
121 Hartwell Avenue
Lexington, Massachusetts 02173
(617) 861-7200

A WORD TO THE WISE:

READ AT LEAST THE FOLLOWING SECTIONS BEFORE ATTEMPTING TO OPERATE YOUR NEW VARIAN 936 LEAK DETECTOR:

SECTION III	**RECEIVING AND INSTALLATION**
SECTION IV	**OPERATION** (Choose the appropriate one for your model: 936-60, 65, or 70)

The complete subject index is given in the following pages, but here is the section index for your convenience:

Section I	**Introduction**
Section II	**Description**
Section III	**Receiving and Installation**
Section IV	**Operation, 936-60 and 936-65**
Section IV	**Operation, 936-70**
Section V	**Tuning and Calibration**
Section VI	**Maintenance, 936-60 and 936-65**
Section VI	**Maintenance, 936-70**
Section VII	**Troubleshooting**
Section VIII	**Schematics**

VARIAN OFFICES AND PLANTS

BOSTON
52 Cummings Park
Woburn, MA 01810
Tel. 617/935-5185

CHICAGO
Executive Plaza Bldg.
205 W. Touhy Avenue
Park Ridge, IL 60068
Tel. 312/825-3103

CLEVELAND
25000 Euclid Avenue
Euclid, OH 44117
Tel. 216/261-2115

DALLAS
P.O. Box 689
Suite 202
558 So. Central Expressway
Richardson, TX 75080
Tel. 214/235-4586

DAYTON
4134 Linden Avenue
Dayton, OH 45432
Tel. 513/258-2099

KNOXVILLE
320 Cedar Bluff Road
Knoxville, TN 37919
Tel. 615/690-3252

LOS ANGELES
9901 South Paramount Blvd.
Downey, CA 90240
Tel. 213/927-2601

WESTERN SERVICE CENTER
Varian I.E.G.
645 Clyde Avenue
Mountain View, CA 94043
Tel. 415/964-2790

Varian SpA
Via Varian
10040 Leini
Torino, ITALY

NEW YORK
Commerce Drive
Cranford, NJ 07016
Tel. 201/276-7534

SAN FRANCISCO
375 C Distel Circle
Los Altos, CA 94022
Tel. 415/968-4936

SEATTLE
Bldg. 2, Suite 230
300 120th Avenue, N.E.
Bellevue, WA 98005
Tel. 206/454-3432

ST. PAUL
1306 West County Road F
St. Paul, MI 55112
Tel. 612/636-8036

SYRACUSE
6489 Ridings Road
Syracuse, NY 13206
Tel. 315/437-3307

WASHINGTON, D.C.
4701 Lydell Drive
Cheverly, MD 20785
Tel. 301/772-7433

LEXINGTON
121 Hartwell Avenue
Lexington, MA 02173
Tel. 617/861-7200

EASTERN SERVICE CENTER
Varian I.E.G.
52 Cummings Park
Woburn, MA 01810
Tel. 617/935-5185

This is a copy of the shipping list accompanying
your VARIAN 936 LEAK DETECTOR:

THIS PACKAGE CONTAINS

One	_____	936-_____ Leak Detector
One	_____	Audio-Visual Leak Indicator
One	_____	Carton, containing Spectrometer Tube Assembly
One	_____	Envelope, containing
	_____	Manual
	_____	Keys (taped to inside of manual front cover)
One		Carton, containing
	_____	Welch Duo-Seal Oil
	_____	Ion Source
	_____	Cold Cathode Gauge Liner
	_____	Hubbell Receptacle
	_____	Cover Plate

Please refer to the Manual, at least Section III (Receiving and Installation) and Section IV (Operation) before attempting to operate your new Varian 936 Leak Detector.

Other accessories shipped with this unit:

_____

_____

_____

_____

_____

VARIAN 936
MASS SPECTROMETER LEAK DETECTOR

FACTORY CALIBRATION DATA

Model Number: 936-65 Date: 8-21-79

Serial Number: A-158 Initials: cjm

Your VARIAN 936 Mass Spectrometer Leak Detector has been thoroughly checked out prior to shipment. It is shipped tuned to helium on filament No. 1. Normally, once set, the tuning adjustments are left untouched and calibration may be verified checked daily or as required.

The data recorded below are readings taken during the final check prior to shipment. They are convenient for reference purposes if tuning adjustments are altered. Slight changes may occur when using filament No. 2 or after an ion source replacement.

Filament No. 1

Tuned Voltages

A. Ion Voltage 242 VDC Dial Setting 4.58

B. Repeller Voltage 338 VDC

C. Focus Voltage 199 VDC

D. Emission Setting 7.8

TABLE OF CONTENTS

		Page
I.	**INTRODUCTION**	1-1
1-1	Leak Testing — Why Is It Needed?	1-1
1-2	Classes of Leak Detection	1-1
1-3	Terminology	1-1
1-4	Various Methods of Testing for Leaks	1-2
1-5	Helium Mass Spectrometer Leak Detection (MSLD)	1-3
1-5.1	Principles of Mass Spectrometry	1-3
1-5.2	Application as a Leak Detector	1-3
1-5.3	The Nature of "Flow" in a Vacuum	1-4
1-5.4	Facts About Leak Rates	1-4
1-6	Leak Detection Methods	1-4
1-6.1	Test Pieces Evacuated (Figure 1-1)	1-4
1-5.2	Test Piece Pressurized (Figure 1-2)	1-6
1-6.3	Test Piece Already Sealed (Figure 1-3)	1-6
1-7	Mass Spectrometer Leak Detector — Simplified Description	1-6
II.	**DESCRIPTION**	2-1
2-1	The Varian 936 Leak Detector	2-1
2-1.1	Spectrometer Tube	2-1
2-1.1.1	Ion Source	2-3
2-1.1.2	Magnetic Field	2-3
2-1.1.3	Preamplifier Assembly	2-3
2-1.1.4	Cold Cathode Vacuum Gauge	2-3
2-1.1.5	Adjustable Source Magnets	2-4
2-1.1.6	Heater	2-4
2-1.2	Vacuum System	2-4
2-1.2.1	Diffusion Pump	2-4
2-1.2.2	Mechanical Pumps	2-4
2-1.2.3	Vacuum Valves	2-4
2-1.2.4	Liquid Nitrogen Trap (936-60 and 936-65)	2-4
2-1.2.5	Contra-Flow (936-70 Only)	2-5
2-1.2.6	Orifice (936-65 Only)	2-6
2-1.3	Electronics	2-6
2-1.3.1	Power Supplies	2-6
2-1.3.2	Vacuum Gauge Control	2-6
2-1.3.3	DC Amplifier	2-6
2-1.3.4	Power Control Circuits	2-7
2-1.3.5	External Signals (Recorder)	2-7
2-1.4	Cabinet	2-7
2-1.5	Compressor for Valve Actuation	2-7
2-1.6	Leak Indicator	2-7

		Page
III.	**RECEIVING AND INSTALLATION**	3-1
3-1	Description of Packaging	3-1
3-2	Unpacking the 936 Container	3-1
3-3	Inspection of Contents	3-1
3-4	Facilities Required for Operation	3-1
3-5	Preparation for Operation	3-2
3-6	Installation Services	3-2
3-7	Storage of Leak Detector	3-2
IV.	**OPERATION (936-60, 65)**	4-1
4-1	Introduction	4-1
4-2	Operating Controls and Indicators	4-1
4-3	Startup Procedures	4-4
4-3.1	General	4-4
4-3.2	Complete Startup	4-4
4-3.3	Startup After Overnight Standby	4-5
4-3.4	Startup After Weekend Standby	4-5
4-3.5	Startup After Temporary Interruption of Power	4-6
4-4	Sensitivity and Calibration Check	4-6
4-4.1	Checking Background	4-7
4-5	Operating Procedures	4-9
4-5.1	Preparation	4-9
4-5.2	Normal Test Cycle	4-9
4-5.3	Gross Leak Test Cycle	4-9
4-5.4	Reading the Leak Rate Meter	4-11
4-5.5	Self-Protection Features of the 936 Leak Detector	4-13
4-6	Standby and Shutdown Procedures	4-13
4-6.1	Temporary Interruption of Power	4-13
4-6.2	Overnight Standby	4-14
4-6.3	Weekend Standby	4-14
4-6.4	Complete Shutdown Procedure	4-15
4-6.5	Preparation for Shipping	4-15
IV.	**OPERATION (936-70)**	4-1
4-1	Introduction	4-1
4-2	Operating Controls and Indicators	4-1
4-3	Startup Procedures	4-4
4-3.1	General	4-4
4-3.2	Complete Startup	4-4
4-3.3	Startup After Overnight Standby	4-5
4-3.4	Startup After Weekend Standby	4-6
4-3.5	Startup After Temporary Interruption of Power	4-6
4-4	Sensitivity and Calibration Check	4-6
4-4.1	Checking Background	4-7
4-5	Operating Procedures	4-7
4-5.1	Preparation	4-7
4-5.2	Normal Test Cycle	4-9
4-5.3	Gross Leak Test Cycle	4-9

		Page
4-5.4	Reading the Leak Rate Meter	4-9
4-5.5	Self-Protection Features of the 936 Leak Detector	4-13
4-6	Standby and Shutdown Procedures	4-13
4-6.1	Temporary Interruption of Power	4-13
4-6.2	Overnight Standby	4-13
4-6.3	Weekend Standby	4-14
4-6.4	Complete Shutdown Procedure	4-14
4-6.5	Preparation for Shipping	4-14
V.	**TUNING AND CALIBRATION**	5-1
5-1	General	5-1
5-2	Complete Tuning Procedure	5-3
5-3	Calibration for Direct Reading	5-3
5-4	Operation at Reduced Sensitivity	5-5
VI.	**MAINTENANCE (936-60, 65)**	6-1
6-1	Introduction	6-3
6-2	Daily	6-3
6-2.1	Sensitivity Check	6-3
6-2.2	Filling Cold Trap	6-3
6-3	Weekly	6-3
6-3.1	Cleaning Cold Trap	6-3
6-3.2	Drive Belts	6-5
6-3.3	Oil Level	6-5
6-3.4	Air Filter	6-5
6-3.5	Air Line Filter and Lubricator	6-6
6-4	Semiannual	6-6
6-4.1	Rough Pump Oil Change	6-6
6-4.2	Fore Pump Oil Change	6-7
6-4.3	Oil Blower Motor	6-8
6-5	Annual	6-8
6-5.1	Oil Mechanical Vacuum Pump Motors	6-8
6-5.2	Mechanical Pumps, Belt Change (Forepump and Roughing Pump)	6-8
6-6	Complete Overhaul	6-8
6-6.1	General	6-8
6-6.2	Preparation	6-9
6-6.3	Foreline Manifold, Remove and Clean	6-10
6-6.4	Diffusion Pump, Remove and Clean	6-11
6-6.5	Spectrometer Tube; Remove, Clean and Reassemble	6-11
6-6.6	Cold Trap Housing Assembly (Includes Pump Valve); Remove and Service	6-13
6-6.7	Valve Block Assembly, Remove	6-14
6-6.8	Valve Block Assembly, Disassemble and Clean	6-15
6-6.9	Rough Pump and Forepump, Service	6-17
6-6.10	Reassemble and Install Valve Block Assembly	6-17
6-6.11	Install Cold Trap Housing Assembly (Includes Pump Valve)	6-18
6-6.12	Install Diffusion Pump	6-18
6-6.13	Install Foreline Manifold	6-19
6-6.14	Install Spectrometer Tube	6-19
6-6.15	Pneumatic Hookup	6-19
6-6.16	Electrical Hookup	6-19

		Page
6-6.17	Check-out for Return to Service	6-20
6-7	As-Required Maintenance	6-21
6-7.1	Ion Source Replacement	6-21
6-7.2	Cold Cathode Gauge Cleaning	6-24
6-7.3	Spectrometer Tube Cleaning	6-24
6-7.3.1	Removal	6-24
6-7.3.2	Disassembly and Cleaning	6-25
6-7.3.3	Installation	6-25
6-7.4	Diffusion Pump Cleaning	6-25
6-7.5	Servicing the Bellows-sealed Valves	6-27
6-7.6	Servicing the Solenoid Valves	6-28
6-8	Electronic System	6-28
6-8.1	Units and Modules	6-28
6-8.2	Circuits	6-29
6-8.3	Spectrometer Tube	6-29
6-8.4	Electrometer Amplifier	6-30
6-8.5	Filament Protection	6-30
6-8.6	Spectrometer Tube Power Supply	6-30
6-8.7	Emission Regulator	6-30
6-8.8	Audible Alarm (Optional)	6-31
6-8.9	Indicator Lamps	6-31
6-8.10	Thermocouple Gauge	6-31
6-9	Electrical and Electronic Adjustments	6-31
6-9.1	Ion Source Voltages	6-31
6-9.2	Adjusting the Thermocouple Gauge Circuits	6-32
6-9.3	Overpressure Protection Adjustment	6-32
6-9.4	Meter Amplifier Installation and Adjustment	6-33
6-9.5	Adjustment of Span Control	6-33
6-9.6	Foreline Pressure Switch Adjustment	6-34
6-9.7	Adjustment of Pressure Limit Switches on Optional Air Compressor	6-34
6-10	Leak Checking the Leak Detector	6-34
6-10.1	Determine Procedure by Leak Size	6-34
6-10.2	General Suggestions	6-35
6-10.3	Test Port Pressure Greater Than 700 Millitorr	6-35
6-10.4	Test Port Pressures Between 700 Millitorr and Transfer Pressure Set Point	6-35
6-10.5	Test Port Pressures Less Than Transfer Pressure Set Point	6-35
6-10.6	Leak Checking the 936-60 and 936-65 Leak Detector	6-36
VI.	**MAINTENANCE (936-70)**	6-1
6-1	Introduction	6-1
6-2	Daily	6-3
6-2.1	Sensitivity Check	6-3
6-3	Weekly	6-3
6-3.1	Drive Belts	6-3
6-3.2	Oil Level	6-3
6-3.3	Air Filter	6-3
6-3.4	Air Line Filter and Lubricator	6-4
6-4	Semiannual	6-4
6-4.1	Rough Pump Oil Change	6-4

		Page
6-4.2	Forepump Oil Change	6-5
6-4.3	Oil Blower Motor	6-7
6-5	Annual	6-7
6-5.1	Oil Mechanical Vacuum Pump Motors	6-7
6-5.2	Mechanical Pumps, Belt Change (Forepump and Roughing Pump)	6-7
6-6	Complete Overhaul	6-7
6-6.1	General	6-7
6-6.2	Preparation	6-8
6-6.3	Foreline Manifold, Remove and Clean	6-9
6-6.4	Diffusion Pump, Remove and Clean	6-10
6-6.5	Spectrometer Tube; Remove, Clean and Reassemble	6-11
6-6.6	Pump Valve Assembly; Remove and Service	6-13
6-6.7	Valve Block Assembly, Remove	6-14
6-6.8	Valve Block Assembly, Disassemble and Clean	6-15
6-6.9	Rough Pump and Forepump, Service	6-15
6-6.10	Reassemble and Install Valve Block Assembly	6-15
6-6.11	Install Pump Valve Assembly and Spectrometer Tube	6-17
6-6.12	Install Diffusion Pump	6-17
6-6.13	Install Foreline Manifold	6-18
6-6.14	Pneumatic Hookup	6-18
6-6.15	Electrical Hookup	6-18
6-6.16	Checkout for Return to Service	6-19
6-7	As-Required Maintenance	6-20
6-7.1	Ion Source Replacement	6-20
6-7.2	Cold Cathode Gauge Cleaning	6-23
6-7.3	Spectrometer Tube Cleaning	6-23
6-7.3.1	Removal	6-23
6-7.3.2	Disassembly and Cleaning	6-24
6-7.3.3	Installation	6-24
6-7.4	Diffusion Pump Cleaning	6-24
6-7.5	Servicing the Bellows-sealed Valves	6-26
6-7.6	Servicing the Solenoid Valves	6-27
6-8	Electronic System	6-27
6-8.1	Units and Modules	6-27
6-8.2	Circuits	6-28
6-8.3	Spectrometer Tube	6-28
6-8.4	Electrometer Amplifier	6-29
6-8.5	Filament Protection	6-29
6-8.6	Spectrometer Tube Power Supply	6-29
6-8.7	Emission Regulator	6-29
6-8.8	Audible Alarm (Optional)	6-30
6-8.9	Indicator Lamps	6-30
6-8.10	Thermocouple Gauge	6-30
6-8.11	Diffusion Pump Power Controller	6-30
6-9	Electrical and Electronic Adjustments	6-30
6-9.1	Ion Source Voltages	6-30
6-9.2	Adjusting the Thermocouple Gauge Circuits	6-31
6-9.3	Overpressure Protection Adjustment	6-32
6-9.4	Meter Amplifier Installation and Adjustment	6-32
6-9.5	Adjustment of Span Control	6-32

		Page
6-9.6	Foreline Pressure Switch Adjustment	6-33
6-9.7	Adjustment of Pressure Limit Switches on Optional Air Compressor	6-33
6-9.8	Adjustment of Diffusion Pump Minimum Power	6-34
6-10	Leak Checking the Leak Detector	6-34
6-10.1	Determine Procedure by Leak Size	6-34
6-10.2	General Suggestions	6-34
6-10.3	Test Port Pressure Greater Than 700 Millitorr	6-35
6-10.4	Test Port Pressures Between 700 Millitorr and Transfer Pressure Set Point	6-35
6-10.5	Test Port Pressures Less Than Transfer Pressure Set Point	6-35
6-10.6	Leak Checking the 936-70 Leak Detector	6-35
VII.	**TROUBLESHOOTING**	7-1
	Symptoms	7-1
	Corrective Measures	7-5
VIII.	**SCHEMATICS & PARTS LISTS**	8-1
	936-60 Front View	8-2
	936-60 Side View	8-3
	936-70 Front View	8-4
	936-70 Side View	8-5
	Control Panel	8-6
	Upper Cabinet, Rear View	8-7
	Subchassis, Power Control	8-8
	Leak Indicator Panel	8-9
	Leak Indicator, Top View	8-10
	Spectrometer Tube, Exploded View	8-11
	Spectrometer Tube and Magnet Assembly	8-12
	Cold Cathode Gauge	8-13
	Valve Block	8-14,15
	Valve Bonnet & Trim Assembly	8-16
	Diffusion Pump	8-17
	Control Logic Diagram, 936-60 & 936-65	8-18,19
	Control Logic Diagram, 936-70	8-20,21
	Spares and Accessories Not Illustrated	8-22
	Diffusion Pump Power Control Circuit Schematic	8-23
	Power Control Circuits Main Schematic	8-24
	Electronics, Main Schematic	8-25
	936 Leak Detector Block Diagram	8-26
	T.C. P.S., T.C. Meter & Transfer Circuit Schematic	8-27
	936 Leak Rate Meter/Reject Level Circuit Schematic	8-28
	936 Overpressure Protection Circuit Schematic	8-29
	Logic Latch Circuit Schematic	8-30
	Emission Regulator & Emission Present Detection Circuit Schematic	8-31
	Tuning Voltages/Emission Meter Circuit Schematic	8-32

LIST OF ILLUSTRATIONS

Figure	Title	Page
I.	**INTRODUCTION**	
1-1	Test Piece Evacuated: Tracer Probe Used to Locate Leak	1-5
1-1a	Test Piece Evacuated and Hooded to Determine Overall Leak Rate	1-5
1-2	Test Piece Pressurized; Detector Probe Used to Locate Leak	1-5
1-3	Test Piece Sealed with Helium; Bell Jar Used to Determine Overall Leak Rate	1-5
1-4	Mass Spectrometer Leak Detector	1-6
1-5	Magnetic Separation Principle	1-7
II.	**DESCRIPTION**	
2-1	Getting Acquainted with Your Varian 936 Leak Detector	2-1
2-2	Cut-Away View of Spectrometer Tube	2-2
2-3	Exploded Photograph of Spectrometer Tube	2-2
2-4	Leak Detector Flow Diagrams	2-5
2-5	Block Diagram of Electronics and Spectrometer Tube	2-6
2-6	Operating Ranges and Use of Range Scale Selector	2-8
III.	**RECEIVING AND INSTALLATION**	
3-1	Spectrometer Tube Electrical Plugs	3-2
IV.	**OPERATION (936-60, 65)**	
4-1	Leak Detector Controls	4-1
4-1a	START/VENT Switch	4-1
4-2	Control Panel Controls and Indicators	4-2
4-3	Leak Indicator Panel	4-3
4-4	Valve Operation, Typical Test Cycle	4-8
4-5	Valve Operation, Gross Leak Test Cycle	4-10
4-6	Examples of Direct-Reading Scales	4-12
4-7	Two Examples of Use of Arbitrary Scale	4-12
IV.	**OPERATION (936-70)**	
4-1	Leak Detector Controls	4-1
4-1a	START/VENT Switch	4-1
4-2	Control Panel Controls and Indicators	4-2
4-3	Leak Indicator Panel	4-3
4-4	Valve Operation, Typical Test Cycle	4-8
4-5	Valve Operation, Gross Leak Test Cycle	4-10
4-6	Examples of Direct-Reading Scales	4-12
4-7	Two Examples of Use of Arbitrary Scale	4-12

V. TUNING AND CALIBRATION

		Page
5-1	Spectrometer Tube Parameters	5-2
5-2	Tuning Controls	5-2
5-3	Leak Indicator Panel	5-2
5-4	Range Scale Block Positions	5-3
5-5	Leak Rate Indication as Ion Voltage is Varied	5-3

VI. MAINTENANCE (936-60, 65)

6-1	Table of Scheduled Maintenance	6-2
6-2	Table of As-Required Maintenance	6-2
6-3	Service and Operate Modes, Showing Valve Positions	6-4
6-4	Removing Cold Trap	6-5
6-5	Installing Air Filter	6-5
6-6	Rough Pump Oil Refilling	6-7
6-7	Forepump Oil Refilling	6-7
6-8	Removing Stainless Steel Counter Top	6-9
6-9	Removing Foreline Manifold	6-10
6-10	Lifting Jet Assembly Out of Diffusion Pump	6-10
6-11	Spectrometer Tube (Exploded View)	6-12
6-11a	Magnet Assembly, Heater and Pole Pieces	6-12
6-12	Pin Alignment, Ion Source	6-13
6-13	Preparing to Remove Cold Trap Housing	6-13
6-14	Removing Cold Trap Housing	6-13
6-15	Lifting Out Pneumatic Actuator (Bonnet and Trim)	6-13
6-16	Correct Baffle Position	6-14
6-17	Pneumatic Actuator	6-14
6-18	Lifting Valve Assembly Clear of Frame	6-15
6-19	Removing Cover Plate from Inverted Valve Block	6-15
6-20	Removing Actuators from Valve Block	6-15
6-21	Valve Block, "Exploded" View	6-16
6-22	Optimum Location of Clamps	6-18
6-23	Position of Jet Top When Jet is Firmly Seated	6-18
6-24	Internal Electrical Service Plugs	6-19
6-25	Correct Routing of Cable	6-20
6-26	Service and Operate Modes, Showing Valve Positions	6-22
6-27	Filament Selector	6-21
6-28	Spectrometer Tube (Exploded View)	6-23
6-29	Pin Alignment, Ion Source	6-23
6-30	Cold Cathode Vacuum Gauge	6-24
6-31	Removing Diffusion Pump	6-26
6-32	Lift Jet Assembly Out of Diffusion Pump	6-26
6-33	Position of Jet Top When Jet is Firmly Seated	6-26
6-34	Valve Bonnet & Trim Assembly	6-27

VI. MAINTENANCE (936-70)

		Page
6-1	Table of Scheduled Maintenance	6-2
6-2	Table of As-Required Maintenance	6-2
6-3	Installing Air Filter	6-3
6-4	Rough Pump Oil Refilling	6-5
6-5	Forepump Oil Refilling	6-5
6-6	Service and Operate Modes, Showing Valve Positions	6-6
6-7	Stainless Steel Counter Top	6-8
6-8	Removing Foreline Manifold	6-9
6-9	Lifting Jet Assembly Out of Diffusion Pump	6-9
6-10	Spectrometer Tube (Exploded View)	6-10
6-10a	Magnet Assembly, Heater and Pole Pieces	6-10
6-11	Pin Alignment, Ion Source	6-12
6-12	Removing Pump Valve	6-12
6-13	Removing Actuator from Pump Valve Body	6-12
6-14	Lifting Out Actuator6-12	
6-15	Correct Baffle Position	6-13
6-16	Pneumatic Actuator	6-13
6-17	Lifting Valve Block Assembly Clear of Frame	6-14
6-18	Removing Cover Plate from Inverted Valve Block	6-14
6-19	Removing Actuators from Valve Block	6-14
6-20	Valve Block, "Exploded" View	6-16
6-21	Optimum Location of Clamps	6-18
6-22	Position of Jet Top When Jet is Firmly Seated	6-18
6-23	Internal Electrical Service Plugs	6-19
6-24	Correct Routing of Cable	6-19
6-25	Service and Operate Modes, Showing Valve Positions	6-21
6-26	Filament Selector	6-20
6-27	Spectrometer Tube, Exploded View	6-22
6-28	Pin Alignment, Ion Source	6-22
6-29	Cold Cathode Vacuum Gauge	6-23
6-30	Removing Diffusion Pump	6-25
6-31	Lift Jet Assembly Out of Diffusion Pump	6-25
6-32	Position of Jet Top When Jet is Firmly Seated	6-25
6-33	Valve Bonnet & Trim Assembly	6-26

VII. TROUBLESHOOTING

7-1	Voltages at Preamplifier Plug	7-5

VIII. SCHEMATICS & PARTS LISTS

		Page
8-1	Front View, 936-60	8-2
8-2	Side View, 936-60	8-3
8-3	Front View, 936-70	8-4
8-4	Side View, 936-70	8-5
8-5	Control Panel	8-6
8-6	Upper Cabinet, Rear View	8-7
8-7	Subchassis, Power Control	8-8
8-8	Leak Indicator Panel	8-9
8-9	Leak Indicator, Top View	8-10
8-10	Spectrometer Tube	8-11
8-11	Spectrometer Tube and Magnet Assembly	8-12
8-12	Cold Cathode Gauge	8-13
8-13	Valve Block Assembly	8-15
8-14	Valve Bonnet and Trim Assembly	8-16
8-15	Diffusion Pump	8-17
8-16	Power Control and Control Logic Schematic (936-60, 65)	8-19
8-17	Power Control and Control Logic Schematic (936-70)	8-21
8-18	Diffusion Pump Power Control Circuit (936-70 Only)	8-23
8-19	Power Control Circuits Main Schematic	8-24
8-20	Electronics Main Schematic	8-25
8-21	936 Leak Detector Block Diagram	8-26
8-22	T.C. P.S., T.C. Meter & Transfer Circuit Schematic	8-27
8-23	936 Leak Rate Meter/Reject Level Circuit Schematic	8-28
8-24	936 Overpressure Protection Circuit Schematic	8-29
8-25	Logic Latch Circuit Schematic	8-30
8-26	Emission Regulator & Emission Present Detection Circuit Schematic	8-31
8-27	Tuning Voltages/Emission Meter Circuit Schematic	8-32

SECTION I. INTRODUCTION

1-1 LEAK TESTING — WHY IS IT NEEDED?

Even with today's complex technology it is, for all practical purposes, impossible to manufacture a sealed enclosure or system that can be guaranteed leak proof without first being tested. Through the use of modern leak testing techniques, as implemented by the VARIAN 936 Mass Spectrometer Leak Detector, leak rates in the 10^{-11} std cc/sec range* can be reliably detected. The discussion that follows provides a brief summary of specific information pertinent to the overall subject of leak detection.

1-2 CLASSES OF LEAK DETECTION

There are four general classes of leak detection:

(1) **Hermetic Enclosures (or parts thereof)**
These are tested to prevent entrance of contaminants or loss of fluid that would affect performance of the enclosed unit. Examples: electronic devices, integrated circuits, sealed relays, motors, ring pull tab can ends, and multipin feedthroughs.

(2) **Hermetic Systems**
These are tested to prevent loss of fluid or gas within. Examples: hydraulic systems and refrigeration systems.

(3) **Evacuated Enclosures (or parts thereof)**
These are tested to prevent too-rapid deterioration of vacuum with age. Examples: electron tubes, TV picture tubes, bellows sensing elements, full-panel opening can ends, etc.

(4) **Vacuum Systems**
These are tested to minimize inleakage and allow attainment of better vacuum or higher gas removal ability at any given vacuum (absolute pressure).

1-3 TERMINOLOGY

The following terminology has application throughout this manual:

(1) **Flow**

std cc/sec — one cubic centimeter of gas per second at a pressure differential of one standard atmosphere (760 torr at 0°C).

atm cc/sec — one cubic centimeter of gas per second at ambient atmospheric pressure and temperature (used interchangeably with "std cc/sec" because the difference is insignificant for leak testing purposes).

*936-60 and 936-65.

(2) Rate-of-Rise

In vacuum systems this is defined as the rate of increase of absolute pressure per unit time, with the vacuum pump isolated from the system and is the sum of actual inleakage and internal outgassing. Rate of rise is usually expressed in torr or microns (millitorr) per hour. The flow rate should be expressed in torr liters/second.

(3) Conversions

1 std cc/sec	— 0.76 torr-liter/sec	for practical purposes, equal
1 torr-liter sec	— 1.3 std cc/sec	
1 std cc/sec	— 9.7×10^4 micron cubic feet per hour or practically 10^5 micron CFH (μCFH)	
1 μCFH	— practically 10^{-5} std cc/sec	

(4) Numerical notation-exponential system

Most leak rates of commercial significance are very small fractions of a std cc/sec. Therefore minus powers of ten are used as a convenient system of numerical shorthand.

Table 1-1 below shows the relationship of exponents and multipliers (to the base 10) to the arithmetic form, and the equivalent result.

TABLE 1-1
DECIMAL NOTATION

Multiplier $\times 10^n$		Arithmetic Form		Result
1×10^2	=	1 x 10 x 10	=	100
1×10^1	=	1 x 10	=	10
1×10^0	=	1	=	1
1×10^{-1}	=	1 x 1/10	=	.1
1×10^{-2}	=	1 x 1/10 x 1/10	=	.01
5×10^{-3}	=	5 x 1/10 x 1/10 x 1/10	=	.005
1×10^{-3}	=	1 x 1/10 x 1/10 x 1/10	=	.001

1-4 VARIOUS METHODS OF TESTING FOR LEAKS

There are many methods of testing for leaks in enclosures — either systems or containers. The more commonly used methods along with the range of accuracy provided are listed below:

(1) Water Immersion (Air Bubble Observation)

This method is good to approximately 10^{-3} std cc/sec, and can be more sensitive if internal pressure is increased or vacuum is created above water pressure. This method is limited because of difficulty in differentiating between leakage bubbles and surface desorption bubbles. It is used to test industrial items such as valves, hydraulic components, castings, automotive and air conditioning components.

(2) Dye Penetrant

A special dye, applied to one side of a surface suspected to contain a leak, seeps through the leak and appears on the other side. This method can take an hour or more for a 10^{-4} std cc/sec leak to show up. This test is inexpensive but destructive in some applications, as well as slow and messy.

(3) **Ultrasonic**
This method is good to approximately 10^{-3} std cc/sec. This method tests for ultrasonic sounds coming from a gas leak and is used for testing of high pressure lines.

(4) **Halogen (sensitive to halogen elements or compounds, especially refrigerant gasses)**
This method is good to approximately 10^{-5} std cc/sec in most current applications, but extendable to 10^{-9} std cc/sec under some limited situations. It is critically dependent on operator judgement if leaks are below 10^{-5} std cc/sec and requires constant flow of fresh air in test area because of tendency of trace gas to "hang" in the area. The detector used in this method is sensitive to a variety of gasses from external sources such as cigarette smoke and solvent fumes.

(5) **Radioisotope**
This method is useful only for testing hermetically sealed cavities. It has approximately same range as the helium method but it involves an expensive installation (from four to ten times the cost of a helium installation depending on degree of isolation of radiation required.) It also requires a radiation safety officer.

(6) **Helium Method**
This method is good to 10^{-11} std cc/sec, and is capable of finding leaks of any size larger. This method is useful for testing hermetic seals, vacuum enclosures, and vacuum systems, and is the most versatile of industrial and laboratory leak detection testing methods.

1-5 HELIUM MASS SPECTROMETER LEAK DETECTION (MSLD)

Helium is an excellent trace gas because it is the lightest of the inert gases and as a consequence readily penetrates small leaks. In addition, its presence in the atmosphere is minute (5PPM or 4 millitorr absolute). Helium is easily detected by a simple mass spectrometer (helium has a mass of 4 so that adjacent "peaks" of 3 and 6 are easily separated by this technique.) Also, helium is readily available at reasonable cost ($25 to $30 for a 200 cu. ft. bottle), and is completely non-toxic and non-reactive. The basic principles of the helium MSLD technique are discussed below.

1-5.1 PRINCIPLES OF MASS SPECTROMETRY

A mass spectrometer sorts gases by their molecular weights (mass number) to determine the quantity of each gas present. With the helium MSLD, the point of interest is primarily in helium (although such a device can be adjusted to indicate hydrogen) and the mass spectrometer tube is relatively simple. The principle is to ionize the gasses in vacuum, accelerate the various ions through a fixed voltage, and then separate the ions by passing them through a magnetic field. A slit, properly placed, allows only helium ions to pass through and be collected. The resulting current is amplified and a meter indicates the presence and amount of helium.

1-5.2 APPLICATION AS A LEAK DETECTOR

A mass spectrometer leak detector consists of a spectrometer tube, the electronics to operate and interpret it and a high vacuum system to maintain proper vacuum. In addition, means are provided for connecting a test object, and a "rough vacuum" pump and a system of "roughing" and "test" valves is provided to evacuate the test object for connection to the spectrometer tube; or, if it is a sealed object containing helium to evacuate a chamber containing the test object.

1-5.3 THE NATURE OF "FLOW" IN A VACUUM

It should be noted that the purpose of the vacuum system is to support operation of the analyzing spectrometer tube. Helium molecules entering through a leak individually reach the spectrometer tube in a few milliseconds. Helium molecules as well as molecules of other gases are continuously removed by the vacuum system diffusion pump. If helium is continuously applied to a leak, the concentration in the spectrometer tube will rise sharply at first, then it will reach equilibrium when it is being pumped out at the same rate as it is entering. When helium is completely removed from the leak, the input will drop to zero while the residual helium is pumped out of the system. Thus, a leak is indicated by a rise in output signal of the spectrometer tube.

1-5.4 FACTS ABOUT LEAK RATES

(1) **Visualizing Leaks in Everyday Terms**
10^{-5} std cc/sec: approximately 1 cc/day
10^{-7} std cc/sec: approximately 3 cc/year

(2) **Audible or Visual Detection by Observer**
a. Bubbles rising in water: 10^{-4} std cc/sec or larger
b. Audible Leaks: 10^{-1} std cc/sec or larger.

(3) **Sizes of Leaks in Man-Made Joints**
Studies indicate that almost all leaks at joints are about 5×10^{-7} std cc/sec (about 1 cc/month) or larger. This is true of ceramic-to-metal, plastic-to-metal seals, welded, soldered and brazed joints. Some long-path leaks may be slightly smaller. Diffusion of helium through glass may be as high as 10^{-8} std cc/sec per square centimeter of surface area.

(4) **Variation in Leak Sizes**
Leaks unintentionally "built-in" at joints during manufacture may vary from hour to hour and day to day. Breathing on a 10^{-6} std cc/sec leak provides enough moisture to close it temporarily; perhaps for several days. Atmospheric particles can close a leak of this size. Never depend on an "accidentally made" leak to remain constant. Manufacturing standard leaks for calibration purposes requires special techniques.

1-6 LEAK DETECTION METHODS

Most leak detection methods depend on the use of a tracer gas passing through the leak and being detected on the other side (for example, visual detection of air bubbles in water).

The Mass spectrometer leak detector operates with helium as a tracer and is widely used because it combines high sensitivity with production testing capability. There are three basic methods in common use.

1-6.1 TEST PIECES EVACUATED (FIGURE 1-1)

The object to be tested is evacuated by an auxiliary roughing pump, then valved into the spectrometer vacuum system. The surface of the test object is then probed with a small jet of helium to locate individual leaks, or surrounded by helium (hooded) for an overall leak check.

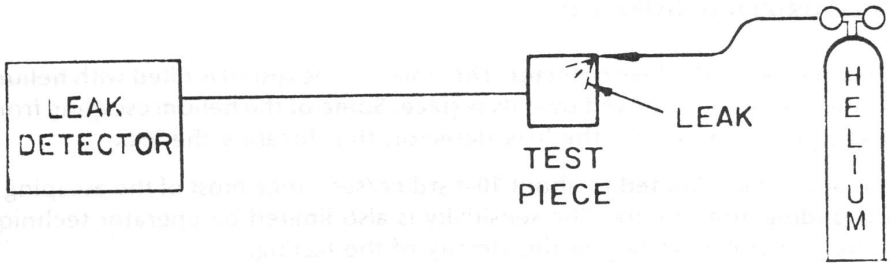

Figure 1-1. Test Piece Evacuated: Tracer Probe Used to Locate Leak

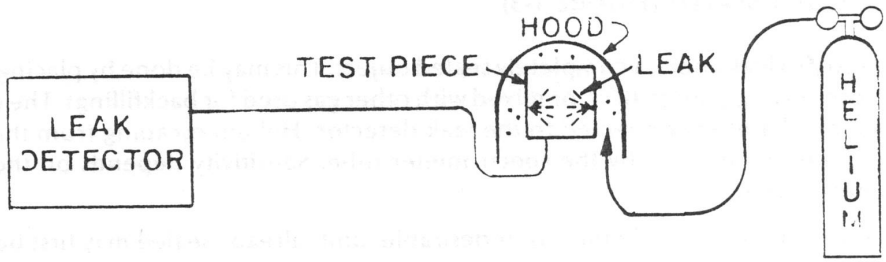

Figure 1-1a. Test Piece Evacuated and Hooded with Helium Atmosphere to Determine Overall Leak Rate

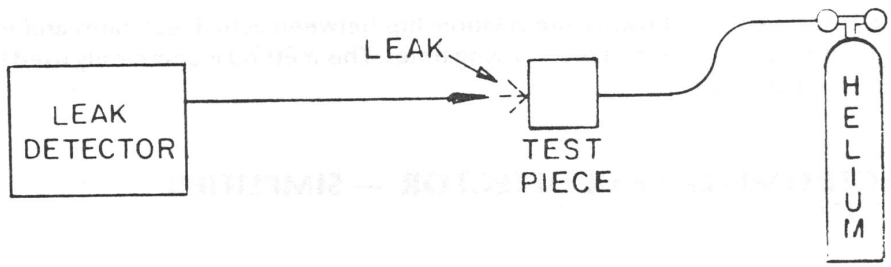

Figure 1-2. Test Piece Pressurized; Detector Probe Used to Locate Leak

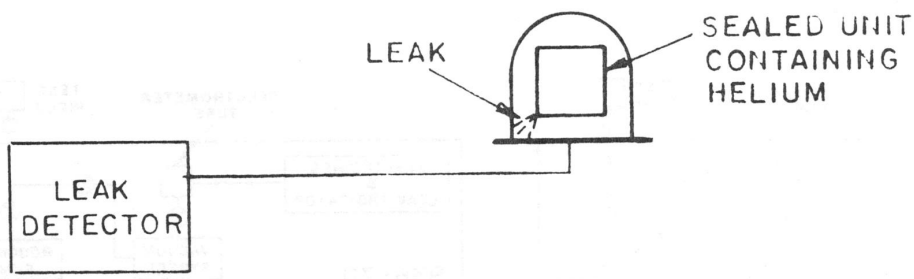

Figure 1-3. Test Piece Sealed with Helium or Mixture of Helium and Other Gases Bell Jar Used to Determine Overall Leak Rate

1-6.2 TEST PIECE PRESSURIZED (FIGURE 1-2)

A sampling probe is connected to the leak detector. The object to be tested is filled with helium at the desired test pressure and the probe is moved over its surface. Some of the helium escaping from a leak is captured through the probe and enters the leak detector, thus locating the leak.

Sensitivity of this type of testing is limited to about 10^{-6} std cc/sec, since most of the escaping helium diffuses into the surrounding atmosphere. The sensitivity is also limited by operator technique and variation in ambient helium concentration in the vicinity of the testing.

An alternative to probing is to enclose the object, and probe the enclosure for change in helium content.

1-6.3 TEST PIECE ALREADY SEALED (FIGURE 1-3)

Sometimes it is necessary to leak check a completely sealed object. This may be done by placing helium inside the object before sealing (either 100% or mixed with other gas used for backfilling). The object is then placed in a vacuum chamber connected to the leak detector. Helium escaping from the object into the vacuum chamber is detected by the spectrometer tube. Sensitivity depends on the partial pressure of helium in the object.

If the presence of helium in the finished object is undesirable, units already sealed may first be placed in a container that is then pressurized with helium for a specific time at a known pressure. Helium will enter the object through any leaks and may be detected later, as in the previous paragraph. Gross leaks may sometimes not be detected, since all helium entering through a large leak may be lost prior to testing. Also, spurious signals may be given by helium not entering the object, but entering surface fissues and remaining long enough to be detected.

Tables are available from VARIAN showing the relationship between actual leak rates and indicated leak rates for various internal volumes and pressurizing times. This method is commonly used to detect leaks in small electronic packages.

1-7 MASS SPECTROMETER LEAK DETECTOR — SIMPLIFIED DESCRIPTION

Each model in the VARIAN 936 family consists basically of an analytical sensing tube called a "spectrometer tube," electronics to operate the tube, and a vacuum system to maintain a very high vacuum within this tube (usually less than 0.1 millitorr or about one ten-millionth of ordinary atmospheric pressure). In addition a rough vacuum pump and a system of valves is provided to enable test cycles to be carried out (see Figure 1-4).

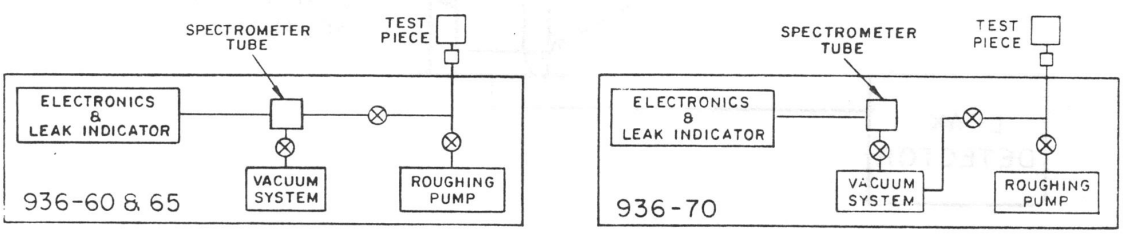

Figure 1-4. Mass Spectrometer Leak Detector

In the spectrometer tube gas molecules are ionized (given a positive electrical charge) by bombarding them with electrons from a hot tungsten filament. The ions, thus formed, are accelerated into a magnetic field where the mass 4 (helium) ions are deflected 90° (see Figure 1-5). Only helium ions reach the collector.

An extremely stable electrometer provides an electron current to the collector which neutralizes the current produced by the collection of helium ions. The "feedback" current is presented on the leak rate meter. Since this current is directly proportional to the number of helium ions striking the collector per unit time, the panel meter reads directly the concentration of helium in the vacuum system at any time. Any helium entering the system causes an increased concentration of helium within the spectrometer tube and therefore an increased deflection of the leak rate meter. In addition to the electrometer, the electronics also provides suitable voltages to operate the spectrometer tube and controls and instrumentation for the vacuum system.

Test pieces are generally "rough" pumped (or, if pressurized, the chamber in which they are to be tested is "rough" pumped) by a separate mechanical vacuum pump before they are connected to the spectrometer tube. This prevents overloading the vacuum pumping system.

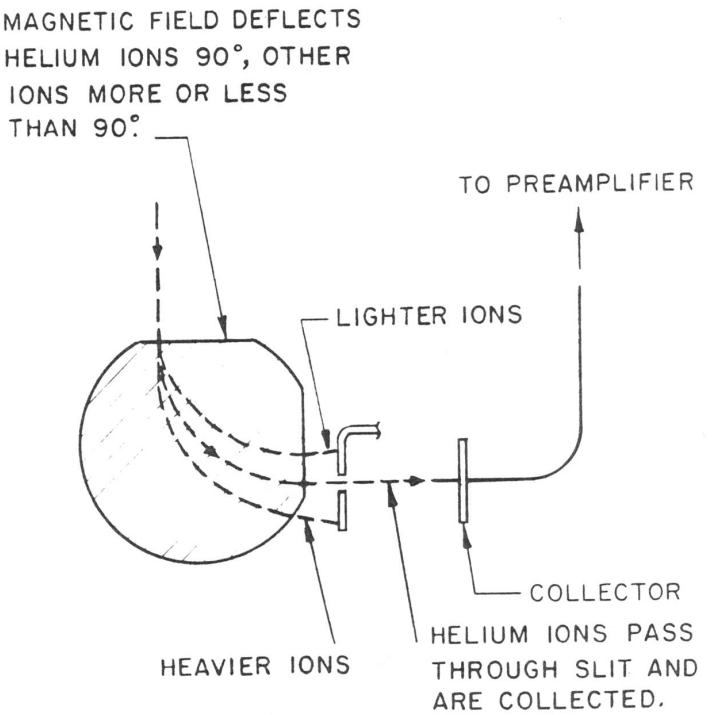

Figure 1-5. Magnetic Separation Principle

SECTION II.
DESCRIPTION

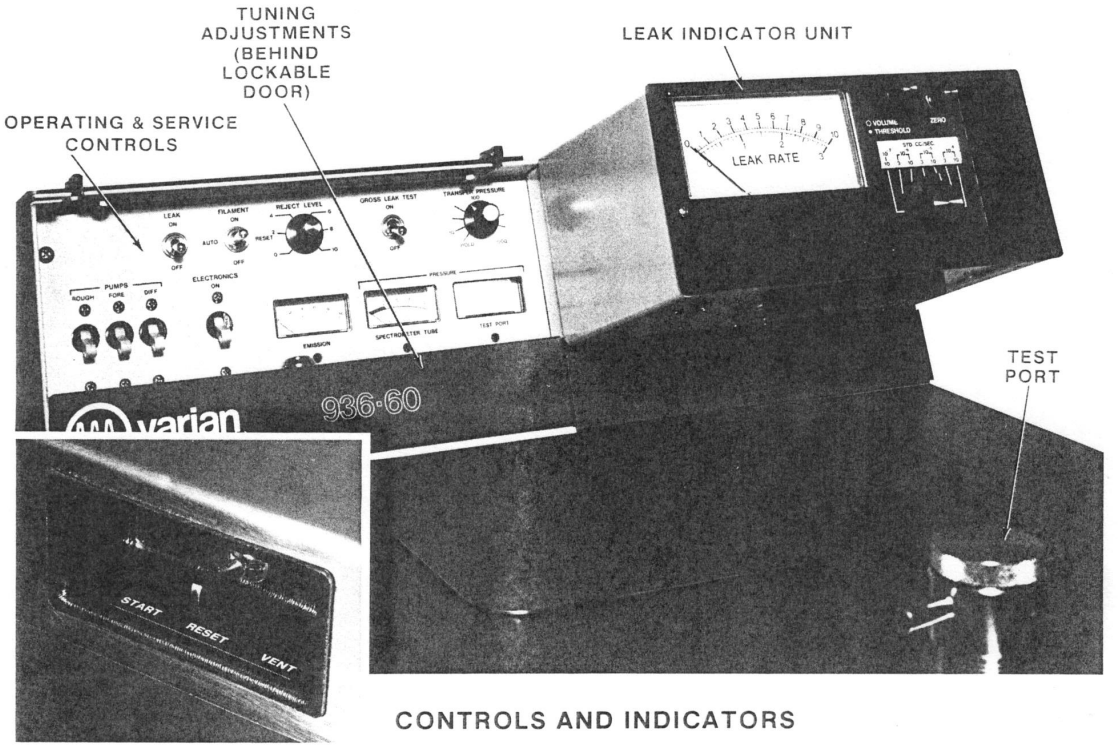

START/VENT SWITCH

CONTROLS AND INDICATORS

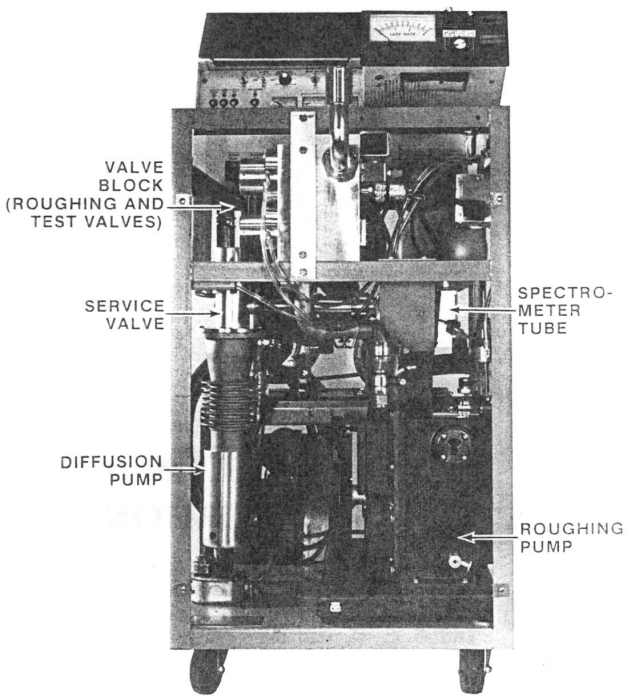

FRONT VIEW

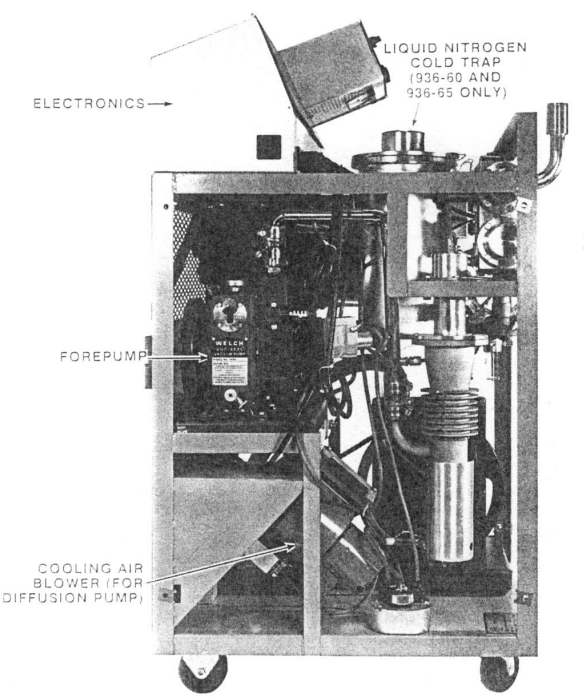

SIDE VIEW

Figure 2-1. Getting Acquainted With Your Varian 936 Leak Detector

SECTION II. DESCRIPTION

2-1. THE VARIAN 936 LEAK DETECTOR

This manual is written for the Varian 936 mass spectrometer leak detector. The 936 is offered in three models. The 936-60 is a high sensitivity high-speed leak detector utilizing a liquid nitrogen trap. The 936-65 is an ultra-high sensitivity version of the 936-60. The 936-70 is a moderate sensitivity high-speed leak detector that does not require liquid nitrogen and can test at pressures a thousand times higher than those required by conventional helium leak detectors.

Each model performs automatic test cycles and includes the following basic components: (See Figure 2-1.)

spectrometer tube
electronics and tuning controls
high vacuum system (diffusion pump and forepump)
roughing pump 5.6 CFM (or optional 10.6 CFM)
operating valve system and controls
service valve system
gross leak test system
visual leak indicator (option audible alarm)

The models differ from each other as shown in the following table:

Model	LN_2 Trap	Typical Transfer Pressure (for evacuated object)	Rated Sensitivity (std. cc/sec of helium)	Emphasis
936-60	Yes	Under 50 millitorr	8×10^{-11}	General purpose
936-65	Yes	Under 20 millitorr	2×10^{-11}	Highest sensitivity
936-70	No	Up to 200 millitorr	4×10^{-10}	Highest test pressure and gas throughput

2-1.1 SPECTROMETER TUBE

The spectrometer tube (Figures 2-2 and 2-3) is the heart of the leak detector. The electronic equipment operates the spectrometer tube and the leak rate indicator provides visual and optional audible interpretation of the helium ion signal. The vacuum system provides the necessary vacuum, 0.2 millitorr or less. The valve system and roughing pump evacuate the object to be tested and properly sequence the testing operation.

The spectrometer tube is attached by means of an integral O-ring coupling to the smooth surface 1-1/8 inch OD tubing. The tube contains an ion source, and ion collector/preamplifier, and a cold cathode vacuum gauge. It is surrounded by a magnetic field provided by two large pole pieces fastened to a block of Alnico V.

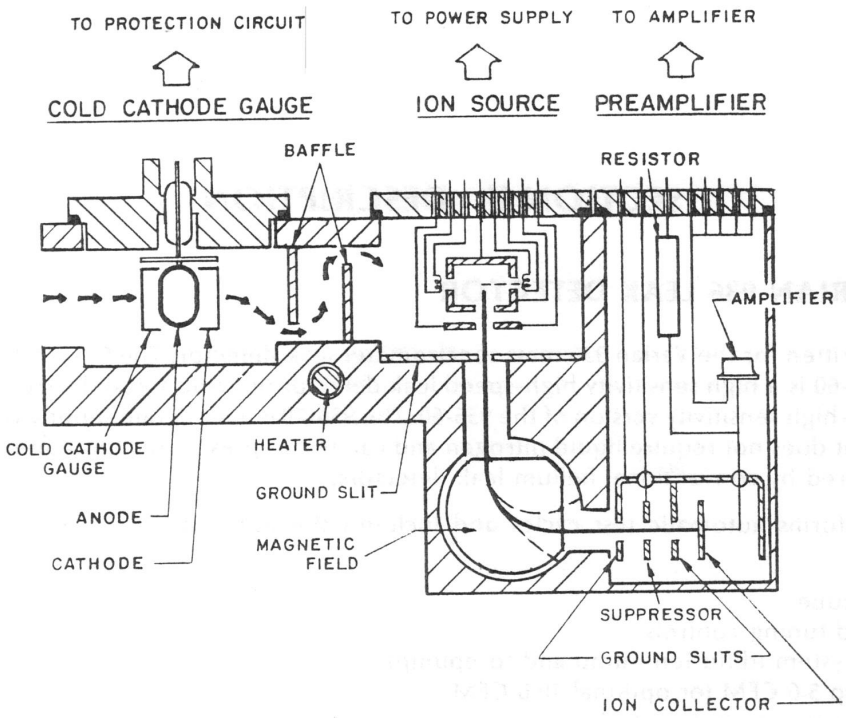

Figure 2-2. Cut-Away View of Spectrometer Tube

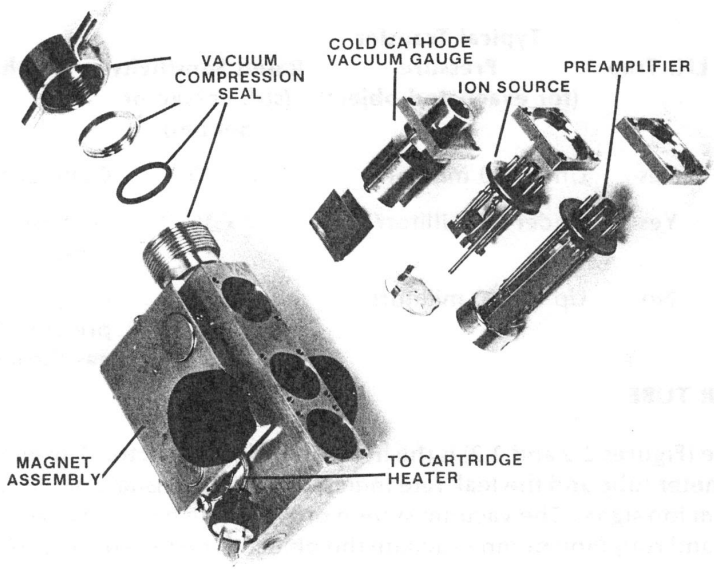

Figure 2-3. Exploded Photograph of Spectrometer Tube

2-1.1.1 Ion Source

The ion source is a one-piece expendable unit, consisting of the following parts:

a. Two permanently-aligned tungsten filaments (one used as a spare) that provide a source of electrons.

b. An ionization chamber into which electrons are "beamed" in order to strike gas molecules to create positive ions.

c. A repeller electrode that repels these positive ions, forcing them out through a slit in the ion chamber.

d. Two focus plates that direct the ion beam toward a slit in a ground-potential plate.

The parts are welded to eight rods that extend through individual glass seals in a round flange to form the male portion of a standard octal connector. A special clamp and O-ring are used to seal the assembly into the spectrometer tube. This construction permits easy servicing of the spectrometer tube. The spare filament allows the user to continue working after one filament burns out until it is convenient to discard the entire source assembly. In addition, no cleaning or disassembly of the source is necessary. It is inexpensively and easily replaced as a unit. All parts of the unit are prealigned, and the unit itself is keyed to the spectrometer tube so that no special skill is required to replace it.

2-1.1.2 Magnetic Field

The magnetic fields are provided by a block of Alnico V which is mounted permanently between two large rectangular, soft iron plates. Inserts in these plates direct the flux into two pole pieces that define the magnetic field which separates the helium from other ions. Other inserts provide fields for the cold cathode vacuum gauge (2-1.1.4) and for the ion source. Made of nickel-plated mild steel, the two pieces are identical, keyed for proper insertion, and O-ring sealed to the spectrometer tube to facilitate service.

2-1.1.3 Preamplifier Assembly

The preamplifier assembly contains an ion collector assembly and a preamplifier stage. The ion collector assembly includes ground-potential electrodes to guide the beam of helium ions, a suppressor electrode to exclude any other ions and an ion collector electrode to translate helium ions into an electrical signal. The preamplifier stage includes a solid-state operational amplifier and a feedback resistor. Having the preamplifier in vacuum protects the electrical signal from external interference and stabilizes the leak rate meter. Like the ion source, the entire assembly is mounted as a unit on eight rods that extend through individual glass seals in a round flange to form the male portion of the preamplifier section connector.

It is factory prealigned and is of all-welded construction. It is sealed in place with a clamp and O-ring. Removal and replacement require no special skill. Special care should be taken in handling the preamplifier assembly, being particularly careful not to subject the preamplifier to a static voltage discharge.

2-1.1.4 Cold Cathode Vacuum Gauge

The cold cathode gauge monitors the vacuum (absolute pressure*) and triggers the protective system if the pressure exceeds 0.2 millitorr. It consists of two pole pieces, a liner that forms the cathode, and a nichrome loop mounted on a single ceramic insulator for an anode. A disc shield prevents sputtered conductive deposits from causing leakage paths across the anode feedthrough insulator. The assembly seals in place with an O-ring. The magnetic field is provided by the common magnet.

*Hereafter referred to as "pressure."

2.1.1.5 Adjustable Source Magnets

Rotatable external eccentric magnetic pole pieces on each side of the ion source enclosure allow adjustment of the electron beam direction for maximum ionization and sensitivity.

2-1.1.6 Heater

During use the filament keeps the entire spectrometer tube at a high temperature to reduce contamination. Whenever the filaments are off for any reason (and regardless of pressure in the tube), the 15-watt cartridge heater is on, maintaining the spectrometer at the same high temperature.

2-1.2 VACUUM SYSTEM

The vacuum system consists of the liquid nitrogen cold trap (Models 936-60 and 936-65 only), a diffusion pump, two mechanical pumps, valves, and interconnecting pipes. The vacuum system serves two functions: it maintains the required vacuum in the spectrometer tube and removes helium after a test. Figure 2-4 shows the vacuum system in schematic form.

2-1.2.1 Diffusion Pump

The diffusion pump removes gases from the spectrometer tube to a pressure of less than 0.2 millitorr. It operates by utilizing a series of vapor jets from specially refined oils to remove air and other gases from the tube, including helium.

2-1.2.2 Mechanical Pumps

The two mechanical pumps serve as the roughing pump and the fore pump. The fore pump is a 0.9 CFM pump that maintains the proper low pressure for the discharge of the diffusion pump. The roughing pump is a 5.6 CFM (optionally 10.6 CFM) unit that evacuates the test port and test piece to the appropriate transfer pressure.

2-1.2.3 Vacuum Valves

The operation of the vacuum system is managed by a number of electrically controlled valves. The three major valves are bellows-sealed and are opened by compressed air and closed by spring action. They are the pump valve (which isolates the inlet of the diffusion pump from the rest of the system), the test valve (which isolates the test port from the spectrometer tube) and the rough valve (which isolates the test port from the roughing pump). Solenoid operated valves are used for the vent valve, gross leak valve, and the calibrated leak valve (optional). Compressed air to the three major valves is controlled by three solenoids mounted on a common manifold.

2-1.2.4 Liquid Nitrogen Cold Trap (936-60 and 936-65 Only)

This double-walled stainless steel vessel holds a 2-3/4 liter charge of liquid nitrogen for 24 hours before it is necessary to refill. Its function is to condense contaminants from the object being tested in order to keep the spectrometer tube operating at a maximum efficiency. It also pumps water vapor at a very high rate. Water vapor, although invisible, is present in and on every object to be tested and it is a major constituent of the gas flowing through the leak detector vacuum system. (In the 936-70, water vapor is pumped by the forepump.)

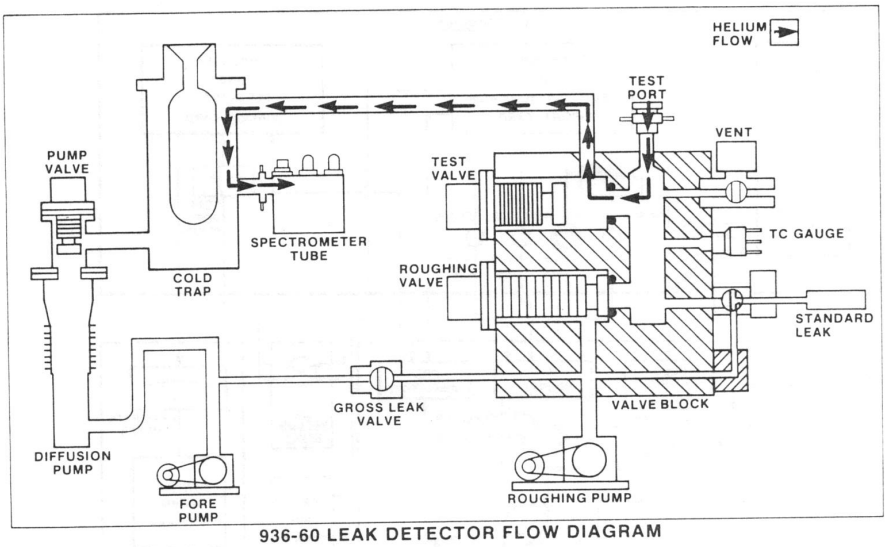

936-60 LEAK DETECTOR FLOW DIAGRAM

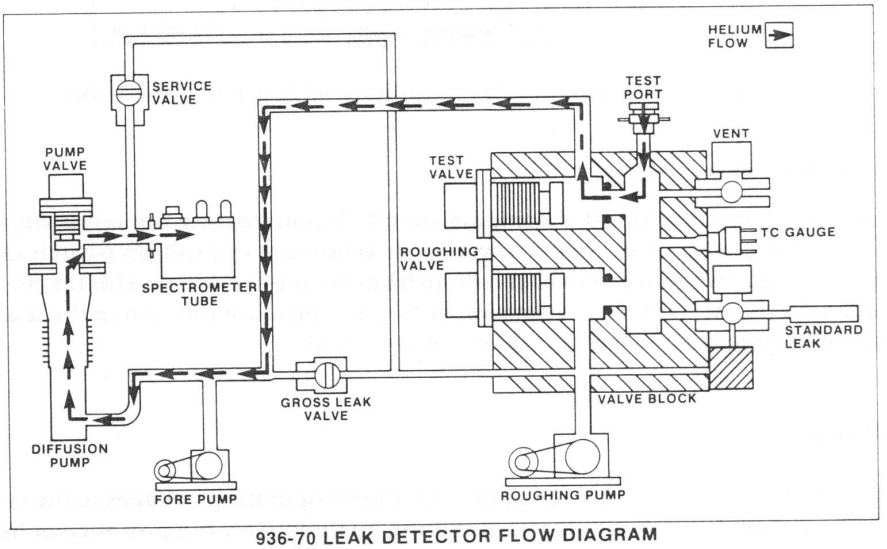

936-70 LEAK DETECTOR FLOW DIAGRAM

Figure 2-4. Leak Detector Flow Diagrams

2-1.2.5 Contra-Flow (936-70 Only)

The 936-70 differs from the 936-60 and 936-65 as follows:

1. Liquid nitrogen trap is eliminated.
2. Routine testing can be done at 100 millitorr.

These advantages are made possible by using an intrinsic property of diffusion pumps; helium has a much lower ratio of forepressure to high vacuum than do atmospheric gases. This allows the pump to act as a selective barrier; helium diffuses back through the pump while other gases are kept out of the high-vacuum side. (The use of this property in a leak detector is patented and is called Contra-Flow™.) When a test is completed any helium that has been detected is rapidly pumped out of the spectrometer tube. Since the only access to the tube is via Contra-Flow, the diffusion pump's ability to keep out condensibles from the test object eliminates the need for a liquid nitrogen trap.

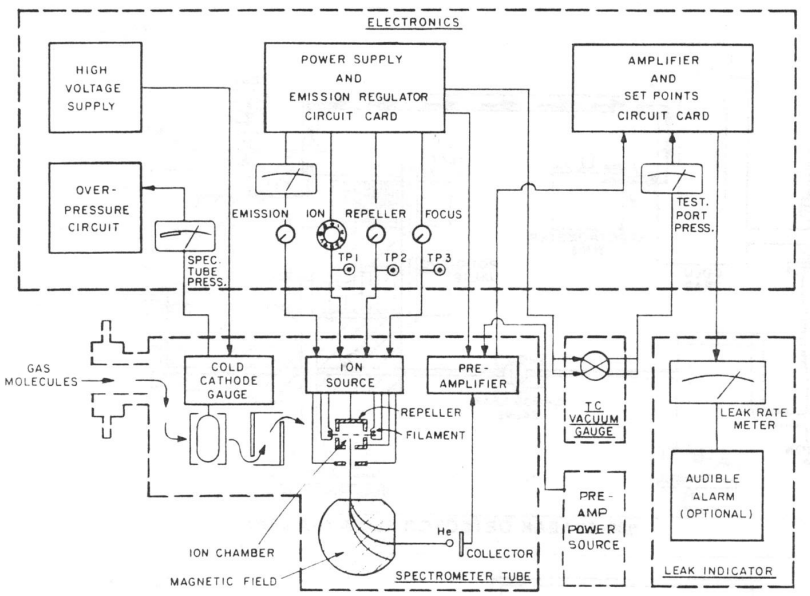

Figure 2-5. Block Diagram of Electronics and Spectrometer Tube

2-1.2.6 Orifice (936-65 Only)

When in position, the orifice throttles the pumping speed, thus increasing the sensitivity of the spectrometer tube (since helium is removed at a lower rate). When out of position (switch OFF), the full pumping speed is restored for rapid removal of helium from the tube to prepare for the next test piece. If the orifice switch is in the AUTOMATIC position, orifice is in position only when the leak detector is ready for testing; otherwise, full pumping speed is maintained.

2-1.3 ELECTRONICS

The general function of this equipment is to supply the proper operating voltages to the spectrometer tube and to provide audible and visible signals, denoting quantitatively the presence of helium in the spectrometer tube. Figure 2-5 shows these functions in block diagram form.

2-1.3.1 Power Supplies

Power supplies provide regulated voltages to the ion source, amplifiers and relays.

2-1.3.2 Vacuum Gauge Control

The vacuum gauge control provides the high voltage to the cold cathode gauge and indicates its output (spectrometer tube pressure). It also activates a relay that shuts off the filament when the pressure is too high.

2-1.3.3 DC Amplifier

The DC amplifier provides a signal proportional to the concentration of helium in the spectrometer tube. This signal is displayed on the leak rate meter, drives the (optional) audible alarm and is available to drive external displays.

2-1.3.4 Power Control Circuits

The basic function of the power control circuits is to open and close valves to permit the evacuation and testing of a test piece connected at the test port. The power control circuits also:

(1) Report the status of the test sequence.

(2) Operate the valves to permit maintenance procedures.

(3) Safeguard the spectrometer tube and diffusion pump in the event of sudden overpressure applied at the test port, or power failure.

2-1.3.5 Electrical Signals Available to User (Recorder and External Circuit)

In addition to the visual and (optional) audible signals, there are also three electrical signals available to the user. The leak rate signal is presented at a jack on the under side of the leak indicator (0-5 volts, impedance 5000 ohms, mating plug Switchcraft type 260 or equivalent). Also, two sets of relay contacts are available. One set indicates whether or not filament emission is present (indicates test validity); the other set indicates whether the leak rate signal is above or below the set point. These contacts are Form C (SPDT), rated at 11 amperes. Connection to them is made at the rear of the leak detector (Mating receptacle: Cinch-Jones plug #S308-CCT) (Leak rate set point: N/O — pin 1, N/C — pin 7, arm — pin 3). (Emission indication: N/O — pin 2, N/C — pin 8, arm — pin 6).

2-1.4 CABINET

The 936 leak detector is housed in a rugged welded angle-iron frame with casters for mobility. The frame is enclosed by four panels which are easily removed and replaced by means of quarter-turn fasteners. The electronic circuits, components and controls are located in a separate closed cabinet bolted to the top of the angle-iron frame. The sloping top of the upper cabinet is hinged to allow access to the circuits and components within.

2-1.5 COMPRESSOR FOR VALVE ACTUATION

If the leak detector is not operating with an external supply of compressed air, air is supplied by a built-in compressor, reservoir and pressure switch. These components are located above the forepump in the rear right corner of the machine. The compressor, mounted on a resilient bracket, furnishes compressed air to the reservoir at the command of the pressure switch. All machines are equipped with a filter-regulator-lubricator to condition the compressed air.

2-1.6 LEAK INDICATOR

The leak indicator is a visual unit with an optional audible signal that utilizes the output of the amplifier to activate the LEAK RATE meter and a speaker. The leak indicator is readily removable from the rest of the electronics. An extension cable for remote use is available.

The LEAK RATE meter is provided with a Range Selector switch that changes the gain of the meter amplifier. This makes possible the display of leak rates over more than four decades (from less than 10% of full scale on the most sensitive range to full scale on the highest range). The meter has two printed scales, marked 0 to 10 and 0 to 3. The position of the range switch determines which scale to read; i.e., if the range switch knob points at any figure starting with 10, read the 0 to 10 scale on the meter; if it points at a figure starting with a 3, read the 0 to 3 scale on the meter (see paragraph 4-5.4).

Immediately above the Range Selector switch is a display window showing the full-scale meter reading for a given selector switch position. The full-scale meter readings are printed on the Range Scale Selector, a four-sided, push-to-rotate block having three direct-reading faces and one face indicating arbitrary units.

Higher leak rates may be measured directly in standard cc/sec by rotating the block to present a higher range of full-scale meter readings and then reducing leak detector sensitivity to calibrate it accordingly.

When leak rates exceed the largest direct-reading value (10^{-4} std cc/sec), the arbitrary face may be used and the readings compared to a standard leak. The table below shows the dynamic range for various block settings for each model in the 936 family.

Range Scale Selector Legend	Total Direct-Reading Range (std cc/sec)		
STD. CC/SEC. 10^{-10} 10^{-9} 10^{-8} 10^{-7} — 10 3 10 3 10 3 10	For 936-60: not used	For 936-65: * 2×10^{-11} to 1×10^{-6}	For 936-70: not used
STD. CC/SEC. 10^{-9} 10^{-8} 10^{-7} 10^{-6} — 10 3 10 3 10 3 10	* 2×10^{-10} to 1×10^{-5}	2×10^{-10} to 1×10^{-5}	not used
STD. CC/SEC. 10^{-8} 10^{-7} 10^{-6} 10^{-5} — 10 3 10 3 10 3 10	2×10^{-9} to 1×10^{-4}	2×10^{-9} to 1×10^{-4}	* 2×10^{-9} to 1×10^{-4}
UNITS 10 30 100 300 1K 3K 10K	not direct reading (used for larger leaks)		

*Shipped at these ranges

Figure 2-6. Operating Ranges and Use of Range Scale Selector

In the above table the 936 leak detectors are calibrated to read leak rates directly in standard cc/sec. However, leaks both larger and smaller can be indicated, as follows:

(1) In the GROSS LEAK mode, all 936 models can indicate leaks up to 1 std cc/sec.

(2) When adjusted for maximum sensitivity, the 936-60 can indicate leaks of 8×10^{-11} std cc/sec. or even smaller. Since leaks smaller than 2×10^{-10} are not direct-reading, the arbitrary scale is used (see paragraph 4-5.4.3).

(3) When adjusted for maximum sensitivity, the 936-70 can indicate leaks of 4×10^{-10} std cc/sec. or even smaller. Again, the arbitrary scale is used since leaks smaller than 2×10^{-9} are not direct-reading.

In normal operation, the leak detector is used for measuring leaks within a spread of a decade or two. For example, leaks of 10^{-8} std cc/sec may be the requirement for a particular production run, while leaks of 10^{-6} std cc/sec may be all that is required to detect in the next run. Therefore, once set, the range scale selector block is usually left in position.

NOTE

The arbitrary scale may be used in place of any of the direct-reading scales, particularly if the leak detector is connected to a large test object or vacuum system such that the overall system sensitivity is less than that of the leak detector alone. In this case a calibrating leak is mounted remotely from the leak detector to determine overall sensitivity. (Paragraph 4-5.4.3)

SECTION III. RECEIVING AND INSTALLATION

3-1 DESCRIPTION OF PACKAGING

The 936 leak detector is carefully packed, banded to a resiliently mounted skid and enclosed by a heavy cardboard container, also banded to the skid. Enclosed in the same package are three additional separate items: the spectrometer tube, the leak indicator module, and a carton containing spares, manual, etc. Inspect the container for evidence of damage in shipment. Do not discard any evidence of rough handling.

3-2 UNPACKING THE 936 CONTAINER

Cut the outside bands and open the top of the container. Remove the excess packing and carefully lift out the separate boxes. Tear the outside carton loose from the nails at the bottom holding it to the skid. Cut the bands holding the 936 Leak Detector to the skid. Carefully pry up the 2 x 2 on the skid at the front of the 936. The 936 may be lowered from the skid in either of two ways:

(1) Carefully roll the front of the 936 off the skid, lowering gently until the floor is contacted, then do the same with the back.

(2) Create a ramp of 2 x 4 and 1 x 2 scraps on which to roll the 936 to floor level.

If the optional compressor is included, be sure to remove the cardboard beside and above the motor.

3-3 INSPECTION OF CONTENTS

The factory packing provides maximum protection during shipment. However, the leak detector and related items should be inspected immediately. Any damage should be reported to the carrier without delay.

3-4 FACILITIES REQUIRED FOR OPERATION:

Power: 120 volts, 60 hertz, 20 ampere service, or 220 volts, 50 hertz, 10 amperes if so ordered. (The leak detector is furnished with a plug and mating receptacle, Hubbel #2610 and coverplate, Hubbel #3392).

Compressed Air: Shop air at 70 psi minimum pressure, 95 psi maximum pressure, 0.40 scfm. maximum usage. (Optional built-in compressor provides air pressure between 70 and 85 psi.)

Helium: Welding grade, standard cylinder with pressure regulating valve (and hose).

Liquid Nitrogen (936-60 and 936-65 only): Enough to provide 3 liters per day (slightly more on initial starting).

3-5 PREPARATION FOR OPERATION:

The leak detector is shipped with the vacuum system and all associated piping evacuated. It is necessary to break vacuum in order to install the spectrometer tube. To prepare leak detector, proceed as follows:

(1) Remove the rear and right side panels and take out loose packing at the top under the air compressor (if present).

(2) Pull off the plastic cap* from the sidearm of the cold trap (936-70: inlet tube of the diffusion pump). If necessary, pierce first with knife, but do not scratch the sidearm tubing. Remove plastic cap* from spectrometer tube (shipped in separate box* in the container to prevent possible damage from shocks received in transit).

(3) Now slide spectrometer tube compression fitting over the sidearm tubing as far as it will go and hand tighten. This will hold the spectrometer tube securely in position and the O-ring within the fitting will provide a good vacuum seal. (Caution: Do not lubricate the O-ring, as lubricants tend to trap helium and give signals when there is no leak present.)

(4) Remove the long bolts* securing both mechanical pumps to the orange frame. The vacuum pumps are shipped with the proper initial charge of oil.

(5) Remove shorting foil from preamplifier pins. Now attach the three plugs as shown in Figure 3-1. The high voltage cable for the cold cathode gauge (on left) should be inserted carefully to be sure that the pointed terminal has entered the cable end. Then slide the cap down over the rim.

(6) Remove Leak Indicator from its shipping container. Unlock and open upper cabinet cover. Place the Leak Indicator unit approximately in its final position, being sure to engage and seat both studs in the keyhole-shaped slots. Tighten thumb screw and make electrical connection.

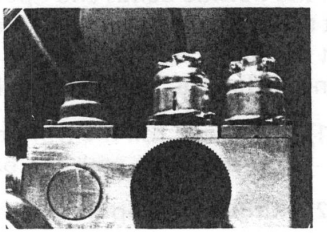

Figure 3-1.

The leak detector is now ready for operation. Refer to Section IV in instruction manual.

3-6 INSTALLATION SERVICE

Installation, operational checkout and operating instructions for your 936 leak detector are provided by a qualified Varian engineer.

When the leak detector is unpacked and the required facilities are available, contact your nearest Varian District Office or the plants at Lexington, Mass., or Palo Alto, Calif., to arrange for field service.

3-7 STORAGE OF LEAK DETECTOR (if not to be used immediately):

If the leak detector will not be used immediately, it can be stored as received without special precautions. A dry, relatively dust-free area is preferable.

*It is suggested that these items be saved if there is a possibility of shipping the leak detector at a later date.

TABLE 4-2
CONTROL PANEL
CONTROLS AND INDICATORS

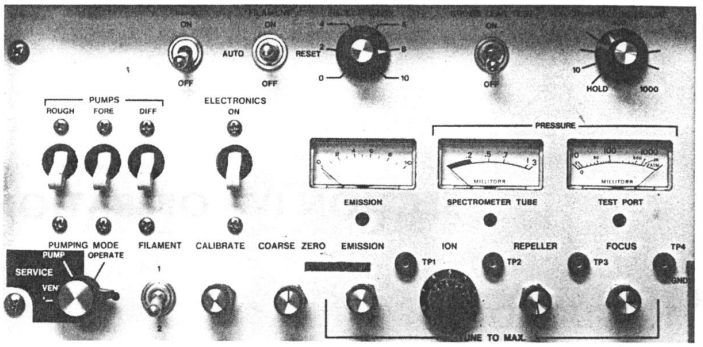

Figure 4-2. Control Panel Controls and Indicators

Control/Indicator	Function
START/VENT (switch)	START — Initiates automatic test cycle. Also permits resumption of test cycle following interruption by overpressure. RESET — enables transfer to TEST after overpressure rejects transfer. VENT — Vents the test port to atmosphere.
LEAK ON/OFF	Connects the calibrated leak (optional) to the test port.
FILAMENT ON/AUTO RESET/OFF	ON — Energizes filament if pressure permits. If filament turns off, will not automatically restart. AUTO RESET — Energizes filament whenever pressure permits. OFF — Turns off filament
REJECT LEVEL	Sets the leak-rate level above which the REJECT lamp will light.
GROSS LEAK ON/OFF	Selects the Gross Leak Mode of operation.
TRANSFER PRESSURE	Sets the test port pressure at which the test valve opens.
PUMPS	ROUGH — Turns on roughing (vacuum) pump FORE — Turns on fore (backing) pump. DIFF — Turns on diffusion pump if fore pump is on.
ELECTRONICS	Turns on electronics system if diffusion pump is on.
EMISSION (meter)	Shows the emission current from the spectrometer tube filament.
SPECTROMETER TUBE PRESSURE (meter)	Shows the pressure at the spectrometer tube.
TEST PORT PRESSURE (meter)	Shows the pressure at the test port.
PUMPING MODE	SERVICE VENT — Isolates diffusion pump to permit servicing of spectrometer tube; vents cold trap and spectrometer tube. SERVICE PUMP — Evacuates spectrometer tube after servicing. OPERATE — Enables the START/VENT switch to control the operation of the leak detector.
FILAMENT 1 - 2	Selects one of two filaments of the ion source
CALIBRATE	Adjusts the amplifier gain to make the leak rate reading agree with the calibrated leak value.
EMISSION	Adjusts the emission by varying the filament current.
ION	Adjusts the ion source chamber voltage (tuning).
REPELLER	Adjusts the repeller-to-chamber voltage (tuning).
FOCUS	Adjusts the focus plate-to-chamber voltage (tuning).

SECTION IV. OPERATION

4-1 INTRODUCTION

This section covers the operating procedures for the 936-60 and 936-65. These include tuning and calibration, operation and shutdown procedures, organized so that you can find the information you need quickly and conveniently. For example, complete start-up is done when the leak detector is new or following a major service overhaul, but it is not done routinely. Similarly, the complete tuning procedure is followed only after changing an ion source or after some other significant change. Therefore these procedures are separated from the routine procedures.

The following is a mini-index for Section IV.

4-1 Introduction
4-2 Operating Controls and Indicators
4-3 Startup Procedures
4-4 Sensitivity and Calibration Check
4-5 Operating Procedures
4-6 Standby and Shutdown Procedures

4-2 OPERATING CONTROLS AND INDICATORS

Figures 4-1 through 4-3 show the leak detector operating controls and indicators. Tables 4-2 and 4-3 describe the operation of controls and indicators on the Control Panel (Figure 4-2) and the Leak Indicator Panel (Figure 4-3), respectively.

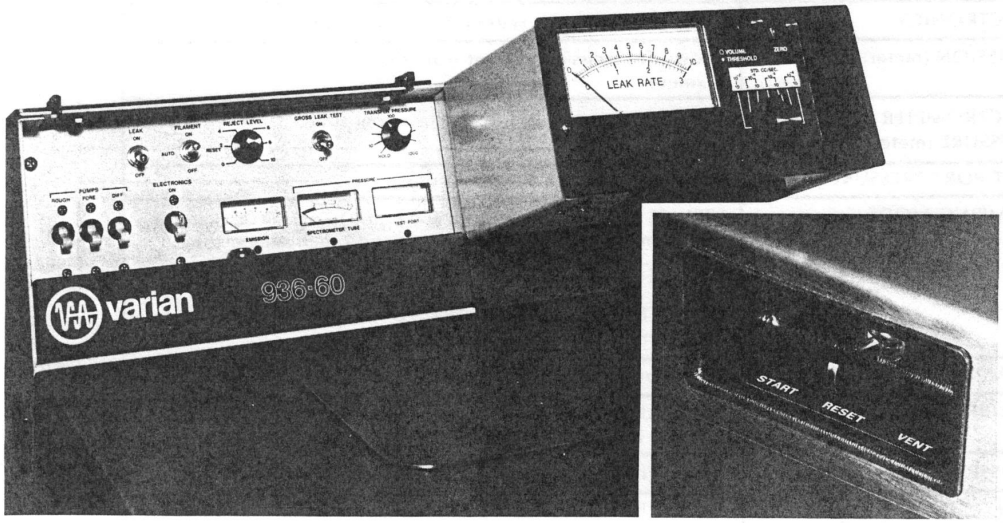

Figure 4-1. Leak Detector Controls

Figure 4-1a. START/VENT Switch

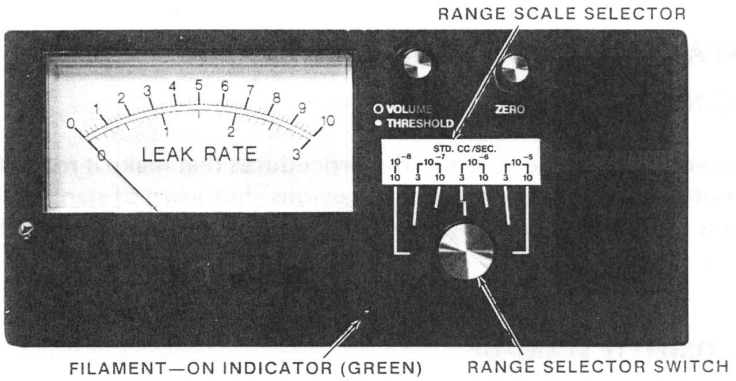

Figure 4-3. Leak Indicator Panel

TABLE 4-3
LEAK RATE INDICATOR PANEL CONTROLS AND INDICATORS

Control/Indicator	Function
LEAK RATE (meter)	Shows a signal proportional to the helium pressure in the spectrometer tube.
THRESHOLD (optional)	Sets the point above which the audible alarm sounds
VOLUME (optional)	Adjusts volume of the audible alarm.
ZERO	Adjusts the leak rate meter (output signal).
Filament-On Indicator (small green lamp)	Indicates that the filament is on (emission is present)
GROSS LEAK (lamp)	Indicates that the test port pressure is above the transfer point (in Gross Leak Mode)
REJECT (lamp)	Indicates that the leak rate is above the reject set point.
TEST (lamp)	Indicates that the test valve is open and the filament is on.
RP OFF (lamp)	No current in the rough pump motor.
BP OFF (lamp)	No current in the fore pump motor.
DP OFF (lamp)	No current in the diffusion pump heater.
FIL OFF (lamp)	Indicates filament is off.
Range Scale Selector	Four-sided push-to-rotate block that displays the seven selectable LEAK RATE meter ranges.
Range Selector Switch	Selects the operating range of the LEAK RATE meter.
ORIFICE AUTOMATIC/OUT (936-65 only)	AUTOMATIC — Orifice plate is in operating position whenever TEST lamp is on. OUT — Orifice plate is always retracted.

TABLE 4-4
CONTROLS AT BACK OF TURRET

Control	Function
CONTROL POWER FUSE	Protects the 24-volt transformer.
COMPRESSOR FUSE	Protects the compressor (if present) and the accessory outlet on the left end of the turret
INTERFACE PLUG (at back of turret)	Provides switch closures for external interfacing with user's system. Closures are provided when emission is present and for leak rate exceeding reject set-point.

4-3 START-UP PROCEDURES

4-3.1 GENERAL

Leak detector start-up consists of the procedures that make it ready for actually conducting leak tests. Choice of procedure depends upon previous shutdown or standby. Checking of sensitivity and background is described. Normally, the leak detector remains in calibration. If retuning and calibration is required, see Section V.

4-3.2 COMPLETE START-UP

The complete start-up procedure should be performed during intial installation or after a complete shutdown of the leak detector (as in paragraph 4-6.4). Proceed as follows:

(1) With the test port plugged, open the door exposing the instrument panel. Unlock and open the inner door.

(2) Set the following controls to the initial condition indicated below:

Front Corner of Top (Fig. 4-1a)

START/VENT	RESET

Control Panel (Fig. 4-2)

LEAK	OFF*	CALIBRATE	Full CCW
FILAMENT ON/OFF	OFF	FILAMENT	1
GROSS LEAK TEST	OFF	COARSE ZERO	As Factory Set**
TRANSFER PRESSURE	HOLD	EMISSION	As Factory Set
PUMPS (all three)	OFF	ION	As Factory Set
ELECTRONICS	OFF	REPELLER	As Factory Set
PUMPING MODE	SERVICE PUMP	FOCUS	As Factory Set
REJECT LEVEL	10		

Leak Indicator Panel (Fig. 4-3)

THRESHOLD	Full CCW*	RANGE CONTROL	Center Position
VOLUME	Full CCW*	ORIFICE switch	OFF (936-65 only)
ZERO	As Factory Set		

(3) Plug machine into appropriate receptacle. The compressor (if present) will start. Some of the panel lamps will light, indicating that the pumps and the filament are off.

(4) If no compressor is built into the machine, connect a source of compressed air to the 1/4 inch (NPT) port at the left corner of the rear of the machine.

(5) Turn on the PUMPS circuit breakers (Figure 4-2) for the ROUGH, FORE, and DIFF pumps. The respective RP OFF, BP OFF, and DP OFF warning lamps on the Leak Indicator Panel turn off as each pump turns on. The diffusion pump lamp (DP OFF) remains lighted until the pressure in the diffusion pump foreline has been sufficiently reduced (approximately 1 minute) and sufficient cooling air prevails.

*NOTE: built-in calibrating leak and audio alarm are optional
**NOTE: or as left at prior shutdown or standby

(6) Allow 30 minutes for the diffusion pump to warm up, then place the ELECTRONICS circuit breaker in the ON position. Verify that the SPECTROMETER TUBE PRESSURE meter reads upscale, then turn the PUMPING MODE switch to the OPERATE position.

(7) When the SPECTROMETER TUBE PRESSURE meter shows 0.5 millitorr, pour a little liquid nitrogen into the cold trap. When the pressure is in the green band (on meter), fill the trap.

WARNING

Liquid nitrogen is extremely cold. Use with caution!

NOTE

Normally the pressure will reach the bottom of the green band (typically in less than a minute). If it doesn't, refer to Section VII.

(8) Set the FILAMENT ON/OFF switch in the AUTO RESET position to turn on the filament. When the filament turns on, the green indicator on the Leak Indicator Panel will light and the FIL OFF lamp will turn off. (This may raise the pressure temporarily, shutting off the filament one or more times.)

(9) Set the Transfer PRESSURE control to approximately 9 o'clock (about 20 millitorr).

(10) Set the START/VENT switch in the START position. Figure 4-4 shows schematically the operation of roughing and test valves when the START/VENT switch is set in the START position. The roughing pump now evacuates the test port. When the pressure in the test port reaches 20 millitorr, the roughing valve closes, the test valve opens to expose the test port to the spectrometer tube, and the TEST lamp lights to show that the leak detector is ready for testing.

(11) Check the sensitivity of the leak detector as described in paragraph 4-4 before proceeding to the test procedures of paragraph 4-5.

4-3.3 START-UP AFTER OVERNIGHT STANDBY

Perform the following start-up procedures when the leak detector has been shut down according to the procedures of paragraph 4-6.2.

(1) Verify that all four circuit breakers (PUMPS and ELECTRONICS) are on, then place the START/VENT switch in the RESET position. Make sure that the SPECTROMETER TUBE PRESSURE meter shows less than 0.2 millitorr (in the green band) and that the filament-on green lamp on the Leak Indicator Panel is on.

(2) Fill the cold trap with liquid nitrogen.

(3) Check the leak detector sensitivity as described in paragraph 4-4 before proceeding with the test procedures of paragraph 4-5.

4-3.4 STARTUP AFTER WEEKEND STANDBY

Perform the following startup procedures when the leak detector has been shutdown according to the procedures of paragraph 4-6.3:

(1) Verify that the roughing pump is operating, (warning lamp is not illuminated). If not, turn on the corresponding circuit breaker.

(2) Set the ELECTRONICS circuit breaker in the ON position.

(3) If the SPECTROMETER TUBE PRESSURE meter shows less than 0.5 millitorr, fill the cold trap. Otherwise, wait until the pressure is reduced to 0.5 millitorr before filling the cold trap.

NOTE

Normally the pressure will reach the bottom of the green band (typically in less than a minute). If it doesn't, refer to Section VII.

(4) Set the FILAMENT ON/OFF switch in the AUTO RESET position. Verify that the EMISSION meter shows a current.

(5) Move the FILAMENT 1-2 switch to the alternate position to outgas the other filament, then return it to the original position. (This may raise the pressure temporarily, shutting off the filament one or more times.)

(6) Adjust the TRANSFER PRESSURE Control to approximately 9 o'clock and then set the START/VENT switch in the START position. When the TEST lamp lights, the leak detector is ready for a sensitivity check.

(7) Check the leak detector sensitivity as described in paragraph 4-4 before executing the test procedures of paragraph 4-5.

4-3.5 STARTUP AFTER TEMPORARY INTERRUPTION OF POWER

If power to the leak detector is interrupted for less than 5 minutes, no special procedure is necessary. The power can be restored or the machine plugged in and put directly to use. However, if the leak detector is unplugged or the power fails for longer than 5 minutes, proceed as follows:

(1) Turn the PUMPING MODE switch to the SERVICE PUMP position before plugging in machine or restoring power.

(2) Turn off ELECTRONICS circuit breaker.

(3) Leave the PUMPING MODE switch in the SERVICE PUMP position for 30 minutes and then set it to OPERATE. If interruption is less than 30 minutes, then this period can be reduced to an interval equal to the interruption time.

(4) Turn on ELECTRONICS circuit breaker.

(5) If the spectrometer tube pressure is in the green band, turn on the filaments and make sure that the EMISSION meter reads upscale.

NOTE

If the pressure does not reach the bottom of the green band in a few minutes, refer to Section VI.

4-4 SENSITIVITY AND CALIBRATION CHECK

If the optional calibrated leak is installed in the leak detector, turn it on, plug the test port and continue this procedure at step 3 below. If an external calibrated leak is used, proceed as follows:

(1) Place the START/VENT switch in the VENT position.

(2) Install a calibrated leak in the test port. Open its valve.

(3) Place the START/VENT switch in the START position and adjust the TRANSFER PRESSURE control so that transfer occurs and the TEST lamp on the Leak Indicator Panel lights.

(4) Adjust the Range Selector switch on the Leak Indicator Panel until an on-scale LEAK RATE meter indication occurs.

(5) Turn off the calibrated leak. The leak rate indication will move towards zero, indicating that the reading was coming from helium in the calibrated leak. If this doesn't occur, perform the tuning and calibration procedures of Section V.

(6) Adjust the ZERO control on the Leak Indicator Panel until the LEAK RATE meter shows zero. It may be necessary to use the COARSE ZERO control on the Control Panel.

(7) Turn on the calibrated leak again. If the LEAK RATE meter indication agrees within ±20% of the calibrated leak, the procedure is complete. If not, turn the CALIBRATE control fully counterclockwise and continue with step 8.

(8) Make *small* adjustments to the FOCUS, EMISSION and ION controls to assure each contributes to the highest leak rate indication. If the leak rate still doesn't equal the calibrated leak, adjust the CALIBRATE control until it does.

NOTE

If an object is too large or remote to test directly on the test port, a calibrated leak should be located near the remote points. Overall system sensitivity may be significantly lower as a result of additional pumping which will remove some of the helium. Also, system response time will be longer.

4-4.1 CHECKING BACKGROUND

Once helium is no longer entering the leak detector through the leak, the vacuum system rapidly removes the remaining helium. However, a small residual amount is usually present, called background. Normally, background is steady and it can be cancelled by setting the LEAK RATE meter indication to zero. It is sometimes useful to measure background. Proceed as follows:

(1) Verify that the leak detector is tuned and calibrated.

(2) Install the test port plug and initiate the test cycle.

(3) If the optional calibrated leak is installed, be sure the LEAK switch is OFF.

(4) When the TEST lamp lights, turn the REPELLER control fully counterclockwise. (This makes the leak detector almost completely insensitive to all gases, including helium.)

(5) Turn the Range Selector to the most sensitive scale.

(6) Adjust the LEAK RATE meter to zero and return the REPELLER to its original setting fully clockwise. The resulting reading is background.

At the time of shipment, the leak detector background is 5×10^{-10} std cc/sec or less. If the background rises above 5×10^{-9} std cc/sec or higher, the vacuum system may be contaminated or it may have a leak. In this case refer to Section VI for maintenance.

VENT STAGE
(TEST PORT OPEN TO ATMOSPHERE)

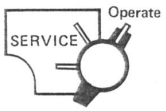

(TYPICAL)

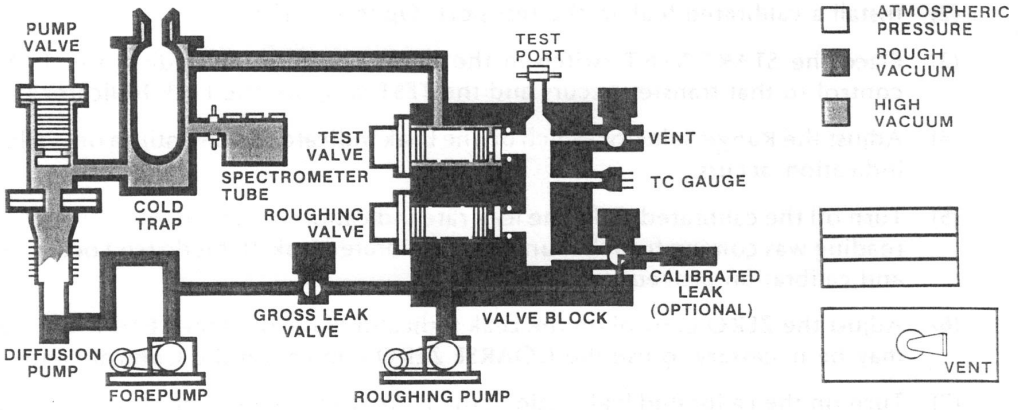

ROUGHING STAGE
(TEST PORT ABOVE TRANSFER PRESSURE)

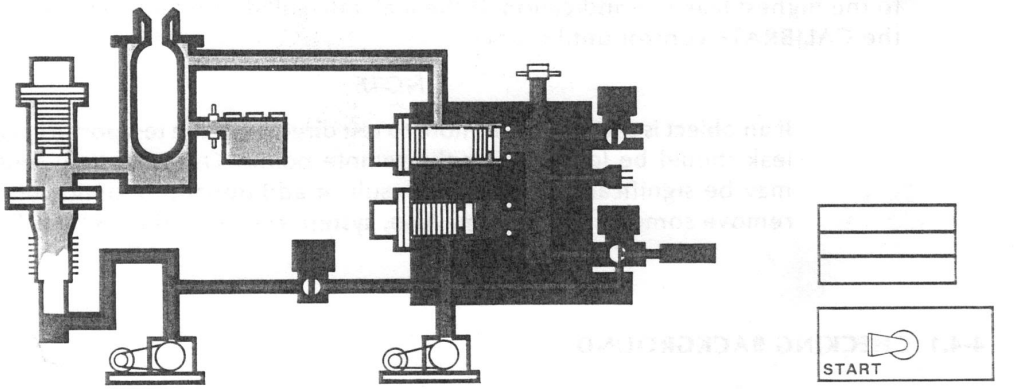

TEST STAGE
(TEST PORT BELOW TRANSFER PRESSURE)

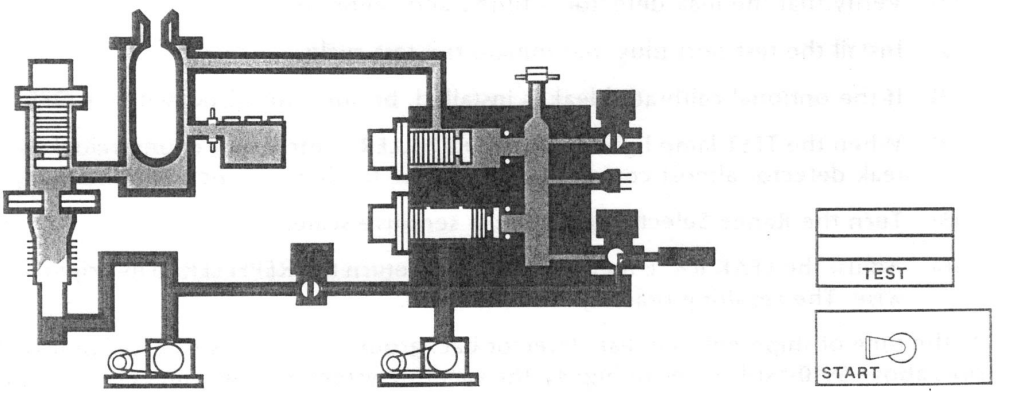

Figure 4-4. Valve Operation : Typical Test Cycle

4-5 OPERATING PROCEDURES

4-5.1 PREPARATION

Be sure that the leak detector is ready for operation, i.e., that the appropriate start-up procedure has been followed (paragraph 4-3).

4-5.2 NORMAL TEST CYCLE (Figure 4-4)

(1) Insert piece to be tested into the test port and secure.

(2) Move the START/VENT switch to START.

NOTE

If the SPECTROMETER TUBE PRESSURE meter reading rises above 0.2 millitorr (above the green band) before the TEST lamp lights, the transfer will be interrupted and the filament will switch off. Adjust the TRANSFER PRESSURE control to a low pressure. Turn the filament back on (Filament turns on automatically if the FILAMENT ON/OFF switch is in the AUTO RESET position.) Move the START/VENT switch to RESET and then back to START.

(3) When the TEST lamp lights, wait for the LEAK RATE meter to come to rest. If the TEST lamp does not light, proceed to paragraph 4-5.3, Gross Leak Test Cycle.

(4) Apply a helium spray to the test piece. Move the spray slowly over suspect areas, such as welds, joints, etc. Observe the LEAK RATE meter or listen to the optional audible alarm. Locate the leak by moving the spray to the point that gives the maximum signal.

(5) When the leak has been located, push the START/VENT switch to the VENT position.

(6) Remove the test piece from the test port.

4-5.3 GROSS LEAK TEST CYCLE (Figure 4-5)

If the TEST PORT PRESSURE meter reading does not reach the transfer set point after reasonable rough-pumping time, the piece may be rejected or alternately the gross leak can be located as follows (see Figure 4-5):

(1) Set the GROSS LEAK switch in the ON position. If the TEST PORT PRESSURE meter is below 700 millitorr, the GROSS LEAK lamp and the TEST lamp will both light.

(2) Proceed with testing as in Section 4-5.2, step 4, above.

NOTE

The leak detector is now operating at lower sensitivity than that of the standard test mode, so it can respond to larger leaks without saturation.

VENT STAGE
(TEST PORT OPEN TO ATMOSPHERE)

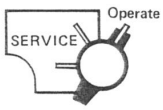

(TYPICAL)

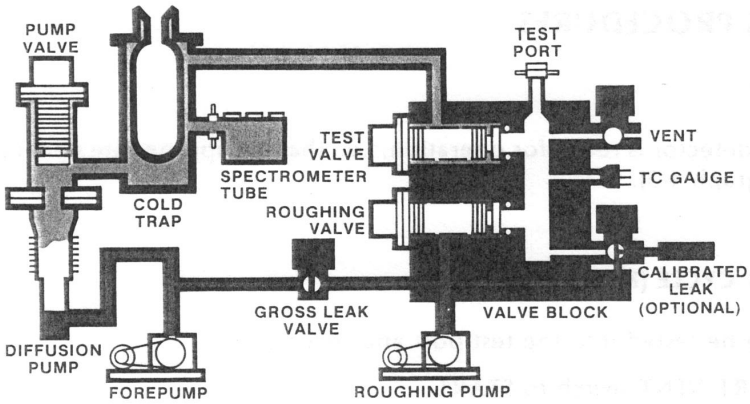

ROUGHING STAGE
(TEST PORT ABOVE 700 MILLITORR)

GROSS LEAK TEST

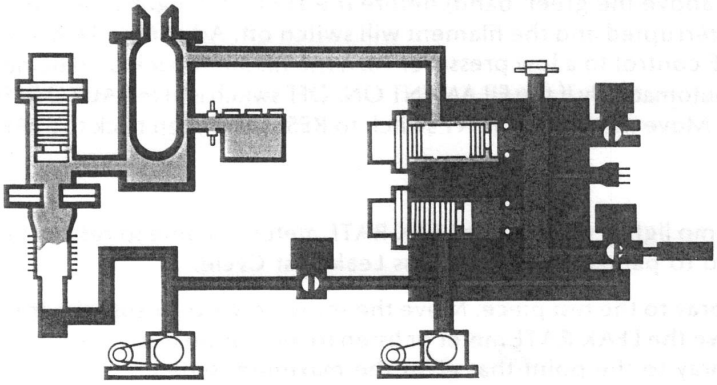

GROSS LEAK TEST STAGE
(TEST PORT BELOW 700 MILLITORR)

GROSS LEAK TEST

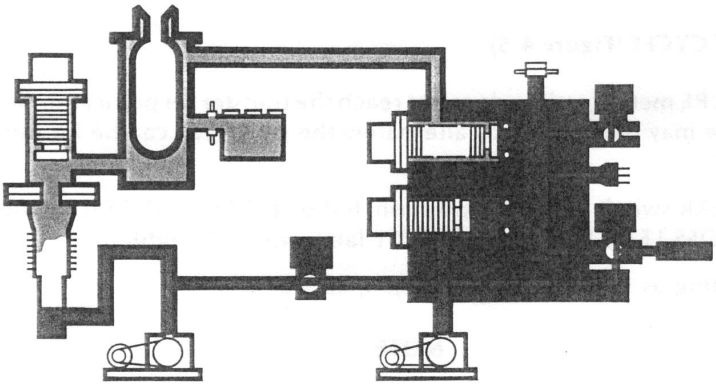

Figure 4-5. Valve Operation : Gross Leak Test Cycle

(3) If the TEST PORT PRESSURE is not below 700 millitorr, the GROSS LEAK lamp and the REJECT lamp will both light. This indicates that the leak is approximately 1 std cc/sec or larger. Location of the leak may be accomplished visually or by other means.

4-5.4 READING THE LEAK RATE METER

The 936 leak detector is capable of reading leak rates directly in standard cc per second over a wide range (6-1/2 decades). Since the LEAK RATE meter and associated Range Selector switch cover 4-1/2 decades, the user can choose the desired 4-1/2 decades by calibration procedures and selection of the appropriate face of the four-sided Range Scale Selector.

The 936-60 leak detector is used with the Range Scale Selector displaying ranges from 10^{-9} through 10^{-6} std cc/sec (Figure 4-6). (Readings from 2×10^{-10} std cc/sec to 10×10^{-6} std cc/sec.)

The 936-65 Leak detector is used with the Range Scale Selector displaying ranges from 10^{-10} through 10^{-7} std cc/sec. (Readings from 2×10^{-11} std cc/sec to 10×10^{-7} std cc/sec.)

4-5.4.1 Choice of a Range Scale

(1) Choice of other scales is dependent on the range of leaks to be evaluated. Regardless of which scale is used, leaks larger than the highest rate readable cannot be measured without reducing the sensitivity of the Leak Detector.

(2) An additional factor in determining which scale to use is the sensitivity of the overall test setup. For instance, when the leak detector is attached to a large system having its own diffusion pump, much of the trace gas is removed before reaching the detector. In this case, it will not be possible to achieve a sensitivity as high as that of the leak detector alone, and the range scale should be selected and calibrated with a calibrated leak located in the system under test (as far from the leak detector as possible.)

4-5.4.2 Calibration for Direct-Reading Range Scales (Figure 4-6)

(1) Procedure for use of any of these three scales is identical. First, select the desired scale by pushing the visible scale in against spring pressure and rotating. Second, insert a known helium leak into the leak detector. Then calibrate the spectrometer tube as in paragraph 4-4 (and 5-3, if necessary to reduce sensitivity) so that the LEAK RATE meter reading agrees with the known value of the calibrated leak. Any unknown leaks may now be read directly in cc/sec, provided that they are probed with 100% helium at atmospheric pressure and that the helium is applied to the unknown leak until a stable maximum reading is reached.

4-5.4.3 Use of the Arbitrary Range Scale (Figure 4-7)

(1) A fourth scale on the scale block may be rotated into the range switch position display window. This is an arbitrary scale calibrated in major divisions (numbered divisions on the meter). This scale is used only when it is not desired (or not possible) to set up the leak detector for direct reading of leak rate. Calibration for the arbitrary scale is given in the following steps.

(2) A calibrated leak is placed in the test port and the LEAK RATE meter reads, for example, 280 (on either the "300" or the "1000" range switch position). This represents a meter displacement of 280 major scale divisions, or 1,400 minor scale divisions. (There are 5 marked minor divisions for each major division. This refers to the 10 range.)

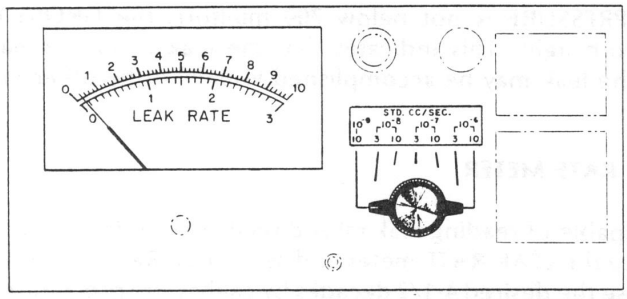

Reading is 2 x 10–10 std cc/sec (0.2 x 10–9). Use 0 to 10 meter scale.

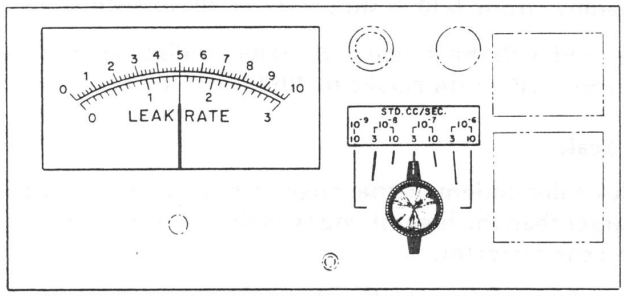

Reading is 1.5 x 10–7 std cc/sec. Use 0 to 3 meter scale.

Figure 4-6 Examples of Direct-Reading Scales

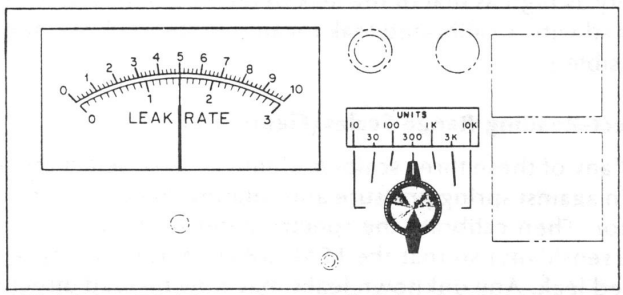

Reading is 150 Major Divisions since Full Scale is 300. Use 0 to 3 meter Scale

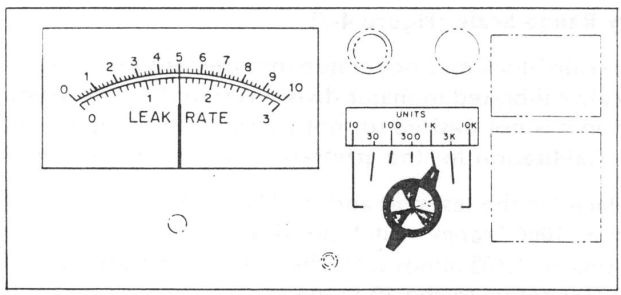

Reading is 500 Major Divisions since Full Scale is 1000. Use 0 to 10 meter Scale

Figure 4-7 Two Examples of Use of Arbitrary Scale

(3) If the calibrated leak is known to leak at the rate of 2.8 x $-^{7}$ std cc/sec, then each major division represents a leak rate of 2.8 x $10^{-7}/280$ std cc/sec, or 1 x 10^{-9} std cc/sec. (Each minor division represents a leak rate of 2.8 x $10^{-7}/1400$ = 2 x 10^{-10} std cc/sec.)

(4) Helium sensitivity of the leak detector is given by the formula $S = \frac{L}{5M}$,

where L is the value of the calibrated leak and M is the meter reading in major divisions when 100% helium at atmospheric pressure is applied to the leak piece.

(5) Now, suppose a leak is present which gives a deflection of 1700 major divisions. (This could be a reference standard leak of unknown value or perhaps a leak in an object under test.) Having just determined that a single major division corresponds to a leak of 1 x 10^{-9} std cc/sec, we can calculate the size of the unknown leak by simple multiplication:

1700 x 1 x 10^{-9} std cc/sec = 1.7 x 10^{-6} std cc/sec

4-5.4.4 Use of the Audible Alarm

The audible alarm threshold is usually at zero on the meter. Any meter deflection above zero will cause the alarm to sound, if the VOLUME is advanced. To shift the threshold up-scale, rotate the THRESHOLD knob clockwise until the desired point is reached. (To verify location of threshold, select a sensitive range and use the ZERO control to move the pointer upscale. Return ZERO and range to original positions.)

4-5.5 SELF-PROTECTION FEATURES OF THE 936 LEAK DETECTOR

If, at any time while the leak detector is in TEST, the pressure in the spectrometer tube rises above 0.2 millitorr, the test mode is interrupted and the filament turns off. If the FILAMENT ON/OFF switch is in the AUTO RESET mode, the filament turns on again when the spectrometer tube pressure is below 0.2 millitorr, but the TEST mode is not re-established. To re-establish the TEST mode, move the START/VENT switch to the RESET position and then back to START. When the pressure in the test port reaches the transfer point and if the filament is on, the TEST lamp on the Leak Indicator panel will once again light. (If the FILAMENT ON/OFF switch is in the ON position, the TEST lamp will not relight until the switch is moved to the AUTO RESET position.)

4-6 STANDBY AND SHUTDOWN PROCEDURES

4-6.1 TEMPORARY INTERRUPTION OF POWER

If the leak detector is unplugged or power fails for 5 minutes or less, no precautions need to be taken. The necessary valves automatically close to protect the spectrometer tube and the diffusion pump. The leak detector automatically returns to the same operating condition once power is restored.

If power remains off longer than 5 minutes, set the PUMPING MODE switch to the SERVICE PUMP position and turn off the ELECTRONICS circuit breaker. Refer to paragraph 4-3.5 for operating procedures when power is restored.

WARNING

Liquid nitrogen is extremely cold. Use with caution!

4-6.2 OVERNIGHT STANDBY

(1) Be sure that the cold trap has been completely filled late in the day to insure that it has enough liquid nitrogen to last overnight. (Full capacity is 2-3/4 liters.)

(2) Place the plug in the test port or the production fixture in use.

(3) Set the START/VENT switch in the START position. Make sure that the TEST light turns on.

(4) (936-65 only) Set orifice switch in OUT position.

These steps will leave the leak detector in the following status:

(1) All vacuum pumps operating.

(2) SPECTROMETER TUBE PRESSURE meter reading in the green band.

(3) Electronics on, including the cold cathode gauge and the filament. (The FILAMENT ON/OFF switch should be placed in the ON position.)

(4) Entire leak detector evacuated and protected.

(5) (936-65) Orifice OUT maintains maximum pumping speed, keeps spectrometer tube clean and at high sensitivity, and protects it in case operator forgets to fill cold trap.

4-6.3 WEEKEND STANDBY

(1) Plug test port and move START/VENT switch to RESET.

(2) Set the ELECTRONICS circuit breaker in the OFF position.

(3) Turn the PUMPING MODE switch to the SERVICE VENT position.

(4) Remove the cold trap. Pour out any residual liquid nitrogen, wash the outside surface of the cold trap with hot water. Use detergent if necessary. Rinse thoroughly and wipe completely dry with a lint-free cloth or paper towel.

(5) Wipe off the O-ring with a lint-free cloth and replace the cold trap, making sure it is centered and properly seated on the O-ring.

(6) Turn the PUMPING MODE switch to the SERVICE PUMP position and wait until the TEST PORT PRESSURE meter shows 5 to 10 millitorr.

(7) Turn the PUMPING MODE switch to the OPERATE position.

(8) (936-65 only) Set orifice switch in OUT position.

These steps will leave the leak detector in the following condition:

(1) All vacuum pumps operating.

(2) Spectrometer tube kept warm by its cartridge heater.

(3) Electronics off, including cold cathode gauge and filament.

(4) Entire leak detector evacuated and protected.

4-6.4 COMPLETE SHUTDOWN PROCEDURE

(1) Set the ELECTRONICS and DIFFUSION PUMP circuit breakers to OFF.

(2) Turn the PUMPING MODE switch to the SERVICE VENT position.

(3) Remove cold trap. Pour out any residual liquid nitrogen, wash the outside surface of the cold trap with hot water. Use detergent if necessary. Rinse thoroughly and wipe completely dry with lint-free cloth or paper towel.

(4) Wipe off O-ring with lint-free cloth and replace cold trap, making sure it is centered and properly seated on the O-ring.

(5) Place the plug in the test port or the production fixture in use.

(6) Turn the PUMPING MODE switch to the SERVICE PUMP position and wait until the TEST PORT PRESSURE meter shows 5 to 10 millitorr.

(7) Set the ROUGH PUMP circuit breaker to OFF.

(8) When the diffusion pump has been off for 20 minutes, turn off the FORE PUMP circuit breaker.

These steps will leave the leak detector in the following condition.

(1) All vacuum pumps off.

(2) Spectrometer tube heated.

(3) Entire leak detector evacuated.

If desired, unplug leak detector power cord. This will turn off pilot lights, spectrometer tube heater, optional compressor and close all valves.

4-6.5 PREPARATION FOR SHIPPING

(1) Perform steps 1 through 5 in paragraph 4-6.4.

(2) Disconnect the electrical plugs from the spectrometer tube.

(3) Remove the tube to pack separately.

(4) Tape or tie the leads to each other and to a nearby support to prevent the excessive swinging of plugs in transit.

(5) Seal the spectrometer tube and the trap side-arm with the red plastic caps or equivalent devices. If one has been punctured, use the intact one on the trap.

(7) When the diffusion pump has been off for 20 minutes, set the FOREPUMP circuit breaker to OFF.

(8) Unplug the machine from the main power supply.

(9) Set the ROUGH PUMP circuit breaker to OFF.

This procedure closes all the valves while the roughing pump is still running, permitting the vacuum which has been attained inside the unit to be sealed.

(10) Secure both mechanical pumps to the floor of the leak detector, using 2-1/2 inch long 1/4 inch diameter bolts through the holes provided.

(11) Replace all doors.

(12) Remove the leak indicator unit. Pack it separately, and tape the keys to the countertop.

These steps will leave the leak detector in the following condition, ready for shipment:

(1) Vacuum system completely evacuated.

(2) All valves closed.

(3) All switches off.

(4) All movable items secured.

Be sure to pack the spectrometer tube and the leak indicator unit securely. The leak detector should be packed in a skid-based crate. Shipping weight is approximately 500 pounds. Its classification is electronic equipment.

SECTION IV. OPERATION

4-1 INTRODUCTION

This section covers the operating procedures for the 936-70. These include tuning and calibration, operation and shutdown procedures, organized so that you can find the information you need quickly and conveniently. For example, complete start-up is done when the leak detector is new or following a major service overhaul, but it is not done routinely. Similarly, the complete tuning procedure is followed only after changing an ion source or after some other significant change. Therefore these procedures are separated from the routine procedures.

The following is a mini-index for Section IV.

4-1 Introduction
4-2 Operating Controls and Indicators
4-3 Startup Procedures
4-4 Sensitivity and Calibration Check
4-5 Operating Procedures
4-6 Standby and Shutdown Procedures

4-2 OPERATING CONTROLS AND INDICATORS

Figures 4-1 through 4-3 show the leak detector operating controls and indicators. Tables 4-2 and 4-3 describe the operation of controls and indicators on the Control Panel (Figure 4-2) and the Leak Indicator Panel (Figure 4-3), respectively.

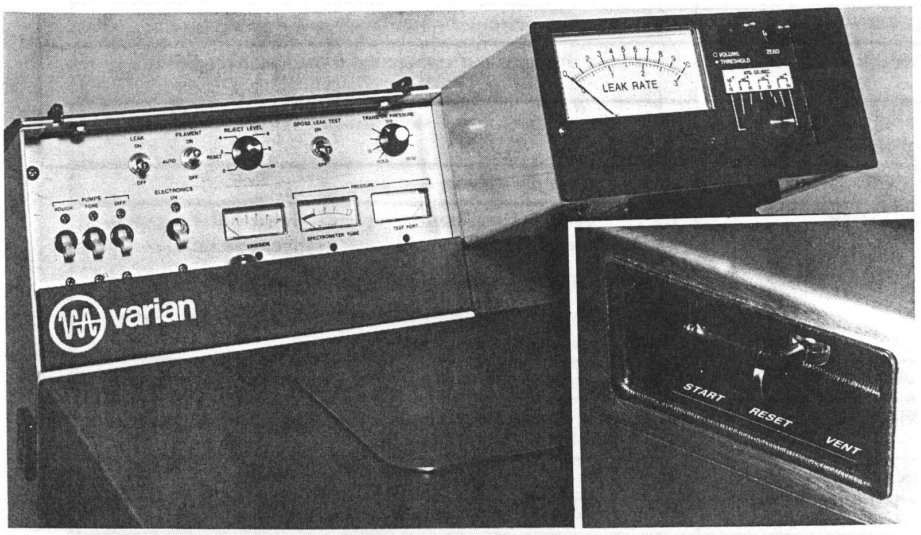

Figure 4-1. Leak Detector Controls

Figure 4-1a. START/VENT Switch

TABLE 4-2
CONTROL PANEL
CONTROLS AND INDICATORS

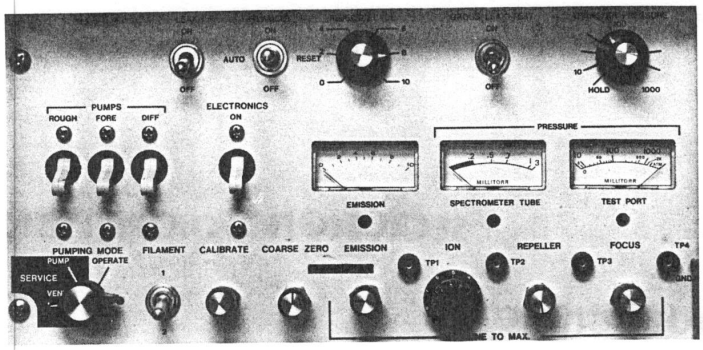

Figure 4-2. Control Panel Controls and Indicators

Control/Indicator	Function
START/VENT (switch)	START — Initiates automatic test cycle. Also permits resumption of test cycle following interruption by overpressure. RESET — enables transfer to TEST after overpressure rejects transfer. VENT — Vents the test port to atmosphere.
LEAK ON/OFF	Connects the calibrated leak (optional) to the test port.
FILAMENT ON/AUTO RESET/OFF	ON — Energizes filament if pressure permits. If filament turns off, will not automatically restart. AUTO RESET — Energizes filament whenever pressure permits. OFF — Turns off filament
REJECT LEVEL	Sets the leak-rate level above which the REJECT lamp will light.
GROSS LEAK ON/OFF	Selects the Gross Leak Mode of operation.
TRANSFER PRESSURE	Sets the test port pressure at which the test valve opens.
PUMPS	ROUGH — Turns on roughing (vacuum) pump FORE — Turns on fore (backing) pump. DIFF — Turns on diffusion pump if fore pump is on.
ELECTRONICS	Turns on electronics system if diffusion pump is on.
EMISSION (meter)	Shows the emission current from the spectrometer tube filament.
SPECTROMETER TUBE PRESSURE (meter)	Shows the pressure at the spectrometer tube.
TEST PORT PRESSURE (meter)	Shows the pressure at the test port.
PUMPING MODE	SERVICE VENT — Isolates diffusion pump to permit servicing of spectrometer tube; vents cold trap spectrometer tube. SERVICE PUMP — Evacuates spectrometer tube after servicing. OPERATE — Enables the START/VENT switch to control the operation of the leak detector.
FILAMENT 1 - 2	Selects one of two filaments of the ion source
CALIBRATE	Adjusts the amplifier gain to make the leak rate reading agree with the calibrated leak value.
EMISSION	Adjusts the emission by varying the filament current.
ION	Adjusts the ion source chamber voltage (tuning).
REPELLER	Adjusts the repeller-to-chamber voltage (tuning).
FOCUS	Adjusts the focus plate-to-chamber voltage (tuning).

TABLE 4-3
LEAK RATE INDICATOR PANEL
CONTROLS AND INDICATORS

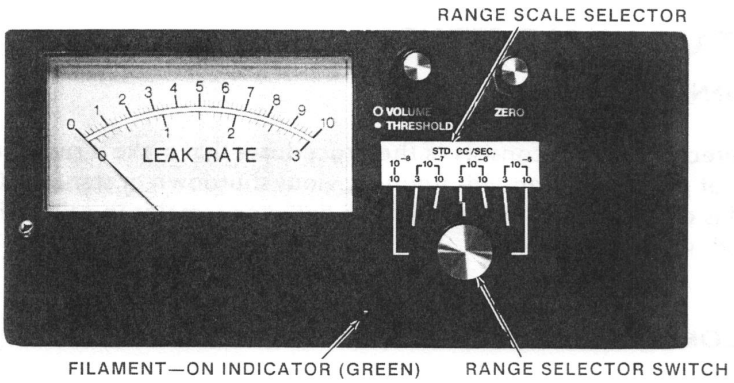

Figure 4-3. Leak Indicator Panel

Control/Indicator	Function
LEAK RATE (meter)	Shows a signal proportional to the helium pressure in the spectrometer tube.
THRESHOLD (optional)	Sets the point above which the audible alarm sounds
VOLUME (optional)	Adjusts volume of the audible alarm.
ZERO	Adjusts the leak rate meter (output signal).
Filament-On Indicator (small green lamp)	Indicates that the filament is on (emission is present)
GROSS LEAK (lamp)	Indicates that the test port pressure is above the transfer point (in Gross Leak Mode)
REJECT (lamp)	Indicates that the leak rate is above the reject set point.
TEST (lamp)	Indicates that the test valve is open and the filament is on.
RP OFF (lamp)	No current in the rough pump motor.
BP OFF (lamp)	No current in the fore pump motor.
DP OFF (lamp)	No current in the diffusion pump heater.
FIL OFF (lamp)	Indicates filament is off.
Range Scale Selector	Four-sided push-to-rotate block that displays the seven selectable LEAK RATE meter ranges.
Range Selector Switch	Selects the operating range of the LEAK RATE meter.

TABLE 4-4
CONTROLS AT BACK
OF TURRET

Control	Function
SENSITIVITY	Adjusts the sensitivity of the leak detector by setting the power to the diffusion pump.
CONTROL POWER FUSE	Protects the 24-volt transformer.
COMPRESSOR FUSE	Protects the compressor (if present) and the accessory outlet on the left end of the turret
INTERFACE PLUG (at back of turret)	Provides switch closures for external interfacing with user's system. Closures are provided when emission is present and for leak rate exceeding reject set-point.

4-3 START-UP PROCEDURES

4-3.1 GENERAL

Leak detector start-up consists of the procedures that make it ready for actually conducting leak tests. Choice of procedure depends upon previous shutdown or standby. Checking of sensitivity and background is described. Normally, the leak detector remains in calibration. If retuning and calibration is required, see Section V.

4-3.2 COMPLETE START-UP

The complete start-up procedure should be performed during intial installation or after a complete shutdown of the leak detector (as in paragraph 4-6.4). Proceed as follows:

(1) With the test port plugged, open the door exposing the instrument panel. Unlock and open the inner door.

(2) Set the following controls to the initial condition indicated below:

Front Corner of Top (Fig. 4-1a)

START/VENT	RESET

Control Panel (Fig. 4-2)

LEAK	OFF*	CALIBRATE	Full CCW
FILAMENT ON/OFF	OFF	FILAMENT	1
GROSS LEAK TEST	OFF	COARSE ZERO	As Factory Set**
TRANSFER PRESSURE	HOLD	EMISSION	As Factory Set
PUMPS (all three)	OFF	ION	As Factory Set
ELECTRONICS	OFF	REPELLER	As Factory Set
PUMPING MODE	SERVICE PUMP	FOCUS	As Factory Set
REJECT LEVEL	10		

Leak Indicator Panel (Fig. 4-3)

THRESHOLD	Full CCW*	RANGE CONTROL	Center Position
VOLUME	Full CCW*	SCALE BLOCK	10^{-8} to 10^{-5} Face
ZERO	As Factory Set		

(3) Plug machine into appropriate receptacle. The compressor (if present) will start. Some of the panel lamps will light, indicating that the pumps and the filament are off.

(4) If no compressor is built into the machine, connect a source of compressed air to the 1/4 inch (NPT) port at the left corner of the rear of the machine.

(5) Turn on the circuit breakers (Figure 4-2) for the ROUGH, FORE, and DIFF pumps. The respective RP OFF, BP OFF, and DP OFF warning lamps on the Leak Indicator Panel turn off as each pump turns on. The diffusion pump lamp (DP OFF) remains lighted until the pressure in the diffusion pump foreline has been sufficiently reduced (approximately 1 minute) and sufficient cooling air prevails.

*NOTE: built-in calibrating leak and audio alarm are optional
**NOTE: or as left at prior shutdown or standby

(6) Turn the SENSITIVITY control (at the back of the upper cabinet, inside the cover) to LOW to heat the diffusion pump more quickly. This control permits sensitivity and test port pressure adjustments, but keeps power constant, wherever it is set. See Section 6-8.11 (-70) for full explanation.

(7) Allow 30 minutes for the diffusion pump to warm up, then place the ELECTRONICS circuit breaker in the ON position. Verify that the SPECTROMETER TUBE PRESSURE meter reads upscale, then turn the PUMPING MODE switch to the OPERATE position.

(8) When the SPECTROMETER TUBE PRESSURE meter is in the green band, set the FILAMENT ON/OFF switch in the AUTO RESET position to turn on the filament. (Switch may be returned to ON position if leak detector will be left unattended.)

NOTE

Normally the pressure will fall into the green band within ten minutes. If it doesn't, refer to Section VI. When the filament turns on, the green indicator on the Leak Indicator Panel will light and the FIL OFF lamp will turn off.

(9) Set the Transfer PRESSURE control to approximately 9 o'clock (about 20 millitorr).

(10) Set the START/VENT switch in the START position. Figure 4-4 shows schematically the operation of roughing and test valves when the START/VENT switch is set in the START position. The roughing pump now evacuates the test port. When the pressure in the test port reaches 20 millitorr, the roughing valve closes, the test valve opens to expose the test port to the spectrometer tube, and the TEST lamp lights to show that the leak detector is ready for testing.

(11) Turn the SENSITIVITY control to the desired setting (see Section 6-8.11 [-70]).

(12) Check the sensitivity of the leak detector as described in paragraph 4-4 before proceeding to the test procedures of paragraph 4-5.

NOTE

Sensitivity is increased by turning this control toward HIGH. Maximum guaranteed sensitivity is 4×10^{-10} std cc/sec. Maximum *direct reading* sensitivity is 2×10^{-9} std cc/sec, satisfactory for most applications and more convenient. Typically, the SENSITIVITY control will have to be about 1/3 turn away from HIGH for this sensitivity.

4-3.3 START-UP AFTER OVERNIGHT STANDBY

Perform the following start-up procedures when the leak detector has been shut down according to the procedures of paragraph 4-6.2.

(1) Verify that all four circuit breakers (PUMPS and ELECTRONICS) are on, then place the START/VENT switch in the RESET position. Make sure that the SPECTROMETER TUBE PRESSURE meter shows less than 0.2 millitorr (in the green band) and that the filament-on green lamp on the Leak Indicator Panel is on.

(2) Check the leak detector sensitivity as described in paragraph 4-4 before proceeding with the test procdures of paragraph 4-5.

4-3.4 STARTUP AFTER WEEKEND STANDBY

Perform the following startup procedures when the leak detector has been shutdown according to the procedures of paragraph 4-6.3:

(1) Verify that the roughing pump is operating (warning lamps are not illuminated). If not, turn on the corresponding circuit breaker.

(2) Verify that the ELECTRONICS circuit breaker is ON.

(3) Set the FILAMENT ON/OFF switch in the AUTO RESET position. Verify that the EMISSION meter shows a current.

(4) Check the leak detector sensitivity as described in paragraph 4-4 before executing the test procedures of paragraph 4-5.

4-3.5 STARTUP AFTER TEMPORARY INTERRUPTION OF POWER

If power to the leak detector is interrupted for less than 5 minutes, no special procedure is necessary. The power can be restored or the machine plugged in and put directly to use. However, if the leak detector is unplugged or the power fails for longer than 5 minutes, proceed as follows:

(1) Turn the PUMPING MODE switch to the SERVICE PUMP position before plugging in machine or restoring power.

(2) Turn off ELECTRONICS circuit breaker.

(3) Leave the PUMPING MODE switch in the SERVICE PUMP position for 30 minutes and then set it to OPERATE. If interruption is less than 30 minutes, then this period can be reduced to an interval equal to the interruption time.

(4) Turn on ELECTRONICS circuit breaker.

(5) If the spectrometer tube pressure is in the green band, turn on the filaments and make sure that the EMISSION meter reads upscale.

NOTE

If the pressure does not reach the bottom of the green band in a half hour, refer to Section VI.

4-4 SENSITIVITY AND CALIBRATION CHECK

If the optional calibrated leak is installed in the leak detector, turn it on, plug the test port and continue this procedure at step 3 below. If an external calibrated leak is used, proceed as follows:

(1) Place the START/VENT switch in the VENT position.

(2) Install a calibrated leak in the test port. Open its valve.

(3) Place the START/VENT switch in the START position and adjust the TRANSFER PRESSURE control so that transfer occurs and the TEST lamp on the Leak Indicator Panel lights.

(4) Adjust the Range Selector switch on the Leak Indicator Panel until an on-scale LEAK RATE meter indication occurs.

(5) Turn off the calibrated leak. The leak rate indication will move towards zero, indicating that the reading was coming from helium in the calibrated leak. If this doesn't occur, perform the tuning and calibration procedures of Section V.

(6) Adjust the ZERO control on the Leak Indicator Panel until the LEAK RATE meter shows zero. It may be necessary to use the COARSE ZERO control on the Control Panel.

(7) Turn on the calibrated leak again. If the LEAK RATE meter indication agrees with the calibrated leak, the procedure is complete. If not, turn the CALIBRATE control fully counterclockwise and continue with step 8.

(8) Make *small* adjustments to the FOCUS, EMISSION and ION controls to assure each contributes to the highest leak rate indication. If the leak rate still doesn't equal the calibrated leak, adjust the CALIBRATE control until it does.

(9) In the 936-70, the SENSITIVITY control at the back of the turret can also be used for calibration. Allow 10 minutes for the diffusion pump to adjust to the new setting.

NOTE

If an object is too large or remote to test directly on the test port, a calibrated leak should be located near the remote points. Overall system sensitivity may be significantly lower as a result of additional pumping which will remove some of the helium. Also, system response time will be longer.

4-4.1 CHECKING BACKGROUND

Once helium is no longer entering the leak detector through the leak, the vacuum system rapidly removes the remaining helium. However, a small residual amount is usually present, called background. Normally, background is steady and it can be cancelled by setting the LEAK RATE meter indication to zero. It is sometimes useful to measure background. Proceed as follows:

(1) Verify that the leak detector is tuned and calibrated.

(2) Install the test port plug and initiate the test cycle.

(3) If the optional calibrated leak is installed, be sure the LEAK switch is OFF.

(4) When the TEST lamp lights, turn the REPELLER control fully counterclockwise. (This makes the leak detector almost completely insensitive to all gases, including helium.)

(5) Turn the Range Selector to the most sensitive scale.

(6) Adjust the LEAK RATE meter to zero and return the REPELLER to its original setting fully clockwise. The resulting reading is background.

At the time of shipment, the leak detector background is 5×10^{-9} std cc/sec or less. If the background rises above 5×10^{-8} std cc/sec or higher, the vacuum system may be contaminated or it may have a leak. In this case refer to Section VI for maintenance.

4-5 OPERATING PROCEDURES

4-5.1 PREPARATION

Be sure that the leak detector is ready for operation, i.e., that the appropriate start-up procedure has been followed (paragraph 4-3).

VENT STAGE
(TEST PORT OPEN TO ATMOSPHERE)

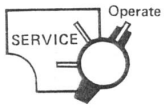

(TYPICAL)

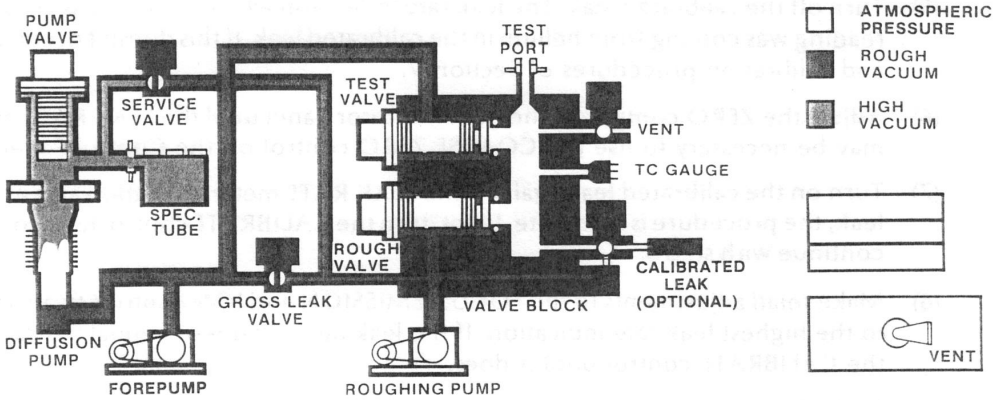

ROUGHING STAGE
(TEST PORT ABOVE TRANSFER PRESSURE)

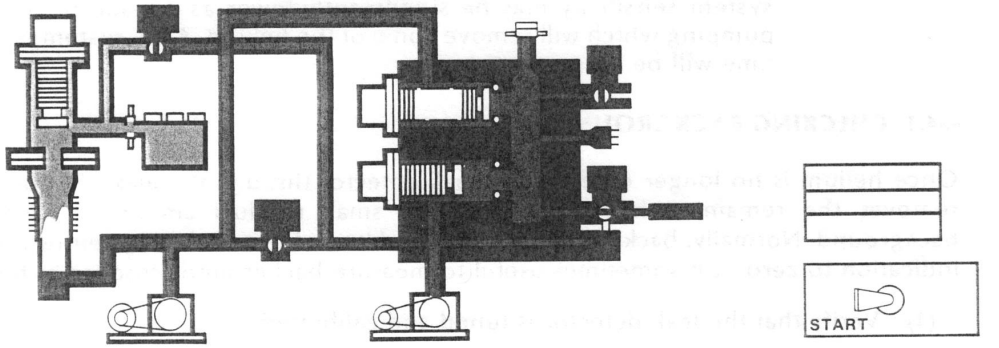

TEST STAGE
(TEST PORT BELOW TRANSFER PRESSURE)

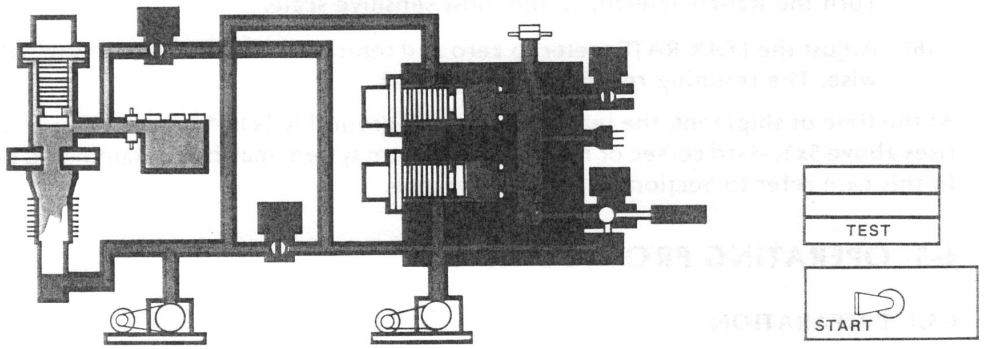

Figure 4-4. Valve Operation : Typical Test Cycle

4-5.2 NORMAL TEST CYCLE (Figure 4-4)

(1) Insert piece to be tested into the test port and secure.

(2) Move the START/VENT switch to START.

NOTE

If the SPECTROMETER TUBE PRESSURE meter reading rises above 0.2 millitorr (above the green band) before the TEST lamp lights, the transfer will be interrupted and the filament will switch off. Adjust the TRANSFER PRESSURE control to a lower pressure. Turn the filament back on (Filament turns on automatically if the FILAMENT ON/OFF switch is in the AUTO RESET position.) Move the START/VENT switch to RESET and then back to START.

(3) When the TEST lamp lights, wait for the LEAK RATE meter to come to rest. If the TEST lamp does not light, proceed to paragraph 4-5.3, Gross Leak Test Cycle.

(4) Apply a helium spray to the test piece. Move the spray slowly over suspect areas, such as welds, joints, etc. Observe the LEAK RATE meter or listen to the optional audible alarm. Locate the leak by moving the spray to the point that gives the maximum signal.

(5) When the leak has been located, push the START/VENT switch to the VENT position.

(6) Remove the test piece from the test port.

4-5.3 GROSS LEAK TEST CYCLE (Figure 4-5)

If the TEST PORT PRESSURE meter reading does not reach the transfer set point after reasonable rough-pumping time, the piece may be rejected or alternately the gross leak can be located as follows (see Figure 4-5):

(1) Set the GROSS LEAK switch in the ON position. If the TEST PORT PRESSURE meter is below 700 millitorr, the GROSS LEAK lamp and the TEST lamp will both light.

(2) Proceed with testing as in Section 4-5.2, step 4, above.

NOTE

The leak detector is now operating at lower sensitivity than that of the standard test mode, so it can respond to larger leaks without saturation.

(3) If the TEST PORT PRESSURE is not below 700 millitorr, the GROSS LEAK lamp and the REJECT lamp will both light. This indicates that the leak is approximately 1 std cc/sec or larger. Location of the leak may be accomplished visually or by other means.

4-5.4 READING THE LEAK RATE METER

The 936 leak detector is capable of reading leak rates directly in standard cc per second over a wide range (6-1/2 decades). Since the LEAK RATE meter and associated Range Selector switch cover 4-1/2 decades, the user can choose the desired 4-1/2 decades by calibration procedures and selection of the appropriate face of the four-sided Range Scale Selector.

The 936-70 leak detector is used with the Range Scale Selector displaying ranges from 10^{-8} through 10^{-5} std cc/sec (Figure 4-6). (Readings from 2×10^{-9} std cc/sec to 10×10^{-5} std cc/sec.)

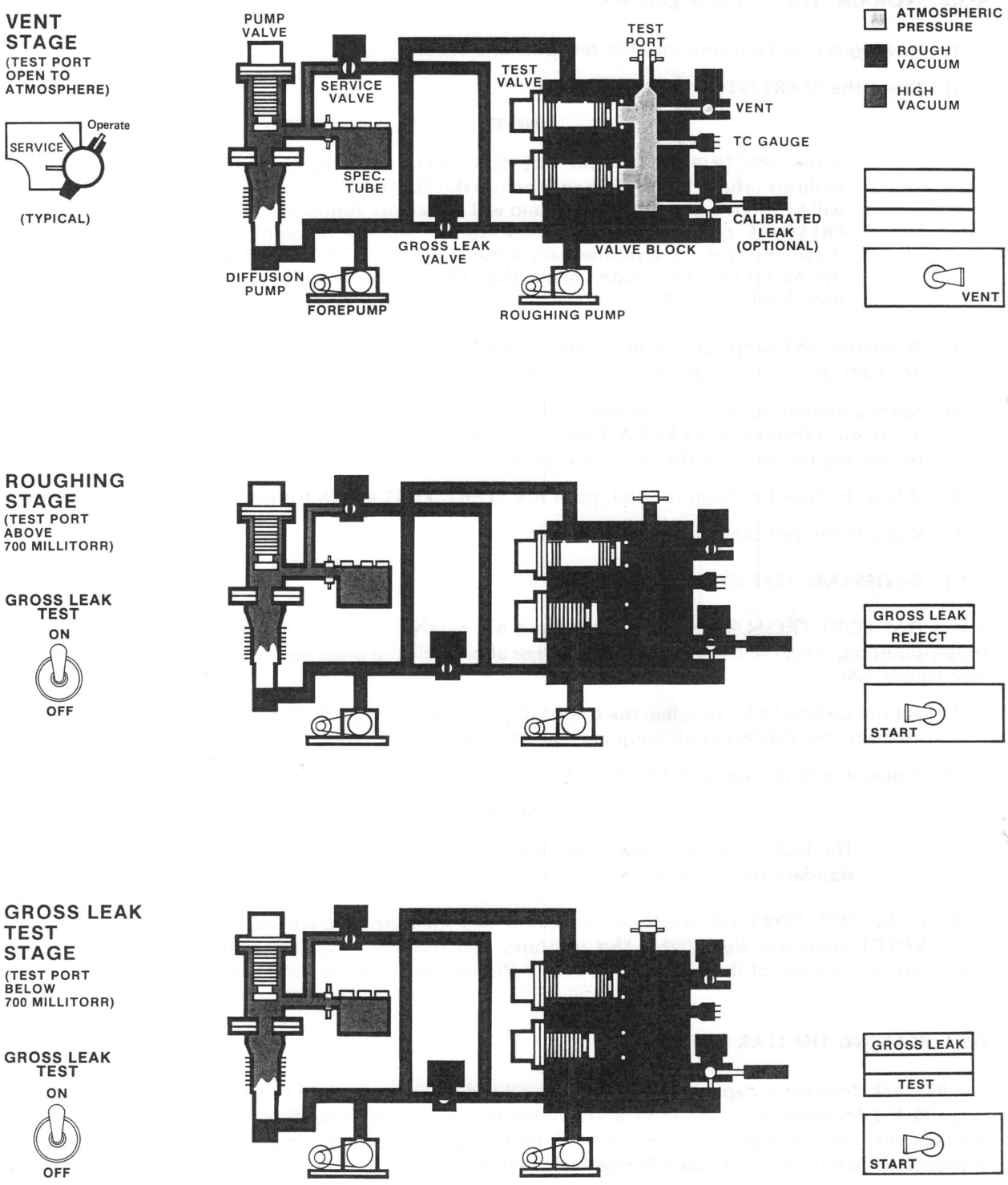

Figure 4-5. Valve Operation : Gross Leak Test Cycle

4-5.4.1 Choice of a Range Scale

(1) Choice of other scales is dependent on the range of leaks to be evaluated. Regardless of which scale is used, leaks larger than the highest rate readable cannot be measured without reducing the sensitivity of the Leak Detector.

(2) An additional factor in determining which scale to use is the sensitivity of the overall test setup. For instance, when the leak detector is attached to a large system having its own diffusion pump, much of the trace gas is removed before reaching the detector. In this case, it will not be possible to achieve a sensitivity as high as that of the leak detector alone, and the range scale should be selected and calibrated with a calibrated leak located in the system under test (as far from the leak detector as possible.)

4-5.4.2 Calibration for Direct-Reading Range Scales (Figure 4-6)

(1) Procedure for use of any of these three scales is identical. First, select the desired scale by pushing the visible scale in against spring pressure and rotating. Second, insert a known helium leak into the leak detector. Then calibrate the spectrometer tube as in paragraph 4-4 (and 5-3, if necessary to reduce sensitivity) so that the LEAK RATE meter reading agrees with the known value of the calibrated leak. Any unknown leaks may now be read directly in cc/sec, provided that they are probed with 100% helium at atmospheric pressure and that the helium is applied to the unknown leak until a stable maximum reading is reached.

4-5.4.3 Use of the Arbitrary Range Scale (Figure 4-7)

(1) A fourth scale on the scale block may be rotated into the range switch position display window. This is an arbitrary scale calibrated in major divisions (numbered divisions on the meter). This scale is used only when it is not desired (or not possible) to set up the leak detector for direct reading of leak rate. Calibration for the arbitrary scale is given in the following steps.

(2) A calibrated leak is placed in the test port and the LEAK RATE meter reads, for example, 280 (on either the "300" or the "1000" range switch position). This represents a meter displacement of 280 major scale divisions, or 1,400 minor scale divisions. (There are 5 marked minor divisions for each major division. This refers to the 10 range.)

(3) If the calibrated leak is known to leak at the rate of 2.8×10^{-7} std cc/sec, then each major division represents a leak rate of $2.8 \times 10^{-7}/280$ std cc/sec, or 1×10^{-9} std cc/sec. (Each minor division represents a leak rate of $2.8 \times 10^{-7}/1400 = 2 \times 10^{-10}$ std cc/sec.)

(4) Helium sensitivity of the leak detector is given by the formula $S = \frac{L}{5M}$,

where L is the value of the calibrated leak and M is the meter reading in major divisions when 100% helium at atmospheric pressure is applied to the leak piece.

(5) Now, suppose a leak is present which gives a deflection of 1700 major divisions. (This could be a reference standard leak of unknown value or perhaps a leak in an object under test.) Having just determined that a single major division corresponds to a leak of 1×10^{-9} std cc/sec, we can calculate the size of the unknown leak by simple multiplication:

$$1700 \times 1 \times 10^{-9} \text{ std cc/sec} = 1.7 \times 10^{-6} \text{ std cc/sec}$$

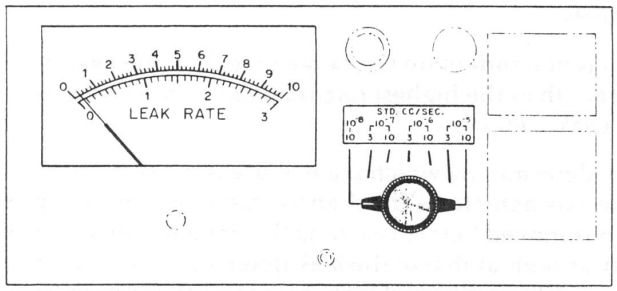

Reading is 2 x 10-9 std cc/sec (0.2 x 10-8). Use 0 to 10 meter scale.

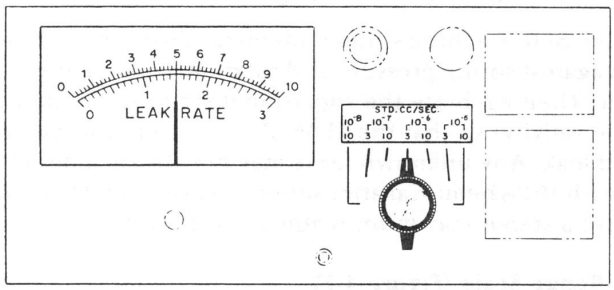

Reading is 1.5 x 10-6 std cc/sec. Use 0 to 3 meter scale.

Figure 4-6. Examples of Direct-Reading Scales

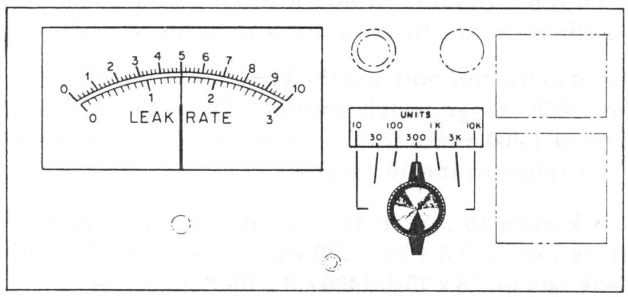

Reading is 150 Major Divisions since Full Scale is 300. Use 0 to 3 meter Scale

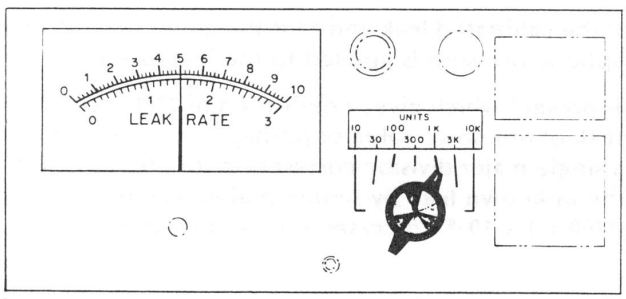

Reading is 500 Major Divisions since Full Scale is 1000. Use 0 to 10 meter Scale

Figure 4-7. Two Examples ot Use of Arbitrary Scale

4-5.4.4 Use of the Audible Alarm

The audible alarm threshold is usually at zero on the meter. Any meter deflection above zero will cause the alarm to sound, if the VOLUME is advanced. To shift the threshold up-scale, rotate the THRESHOLD knob clockwise until the desired point is reached. (To verify location of threshold, select a sensitive range and use the ZERO control to move the pointer upscale. Return ZERO and range to original positions.)

4-5.5 SELF-PROTECTION FEATURES OF THE 936 LEAK DETECTOR

If, at any time while the leak detector is in TEST, the pressure in the spectrometer tube rises above 0.2 millitorr, the test mode is interrupted and the filament turns off. If the FILAMENT ON/OFF switch is in the AUTO RESET mode, the filament turns on again when the spectrometer tube pressure is below 0.2 millitorr, but the TEST mode is not re-established. To re-establish the TEST mode, move the START/VENT switch to the RESET position and then back to START. When the pressure in the test port reaches the transfer point and if the filament is on, the TEST lamp on the Leak Indicator panel will once again light. (If the FILAMENT ON/OFF switch is in the ON position, the TEST lamp will not relight until the switch is moved to the AUTO RESET position.)

4-6 STANDBY AND SHUTDOWN PROCEDURES

4-6.1 TEMPORARY INTERRUPTION OF POWER

If the leak detector is unplugged or power fails for 5 minutes or less, no precautions need to be taken. The necessary valves automatically close to protect the spectrometer tube and the diffusion pump. The leak detector automatically returns to the same operating condition once power is restored.

If power remains off longer than 5 minutes, set the PUMPING MODE switch to the SERVICE PUMP position and turn off the ELECTRONICS circuit breaker. Refer to paragraph 4-3.5 for operating procedures when power is restored.

4-6.2 OVERNIGHT STANDBY (See note on page 4-15)

(1) Leave the ELECTRONICS circuit breaker in the ON position.

(2) Place FILAMENT ON/OFF switch in the ON position.

(3) Place the plug in the test port or production fixture in use.

(4) Set the START/VENT switch in the START position.

(5) When the TEST lamp lights, move the START/VENT switch to RESET.

These steps will leave the leak detector in the following condition:

(1) All vacuum pumps operating.

(2) SPECTROMETER TUBE PRESSURE meter reading in the green band.

(3) Filament ON. (If filament shuts off, spectrometer tube will still be kept warm by its cartridge heater.)

(4) Electronics and cold cathode gauge protection on.

(5) Entire leak detector evacuated and protected.

(6) Valve block and test port manifold isolated from roughing pump and rest of vacuum system.

4-6.3 WEEKEND STANDBY (See note on page 4-15)

(1) Leave the ELECTRONICS circuit breaker in the ON position.

(2) Place FILAMENT ON/OFF switch in the ON position.

(3) Place the plug in the test port or production fixture in use.

(4) Set the START/VENT switch in the START position.

(5) When the TEST lamp lights, move the START/VENT switch to RESET.

These steps will leave the leak detector in the following condition:

(1) All vacuum pumps operating.

(2) SPECTROMETER TUBE PRESSURE meter reading in the green band.

(3) Filament ON. (If filament shuts off, spectrometer tube will still be kept warm by its cartridge heater.)

(4) Electronics and cold cathode gauge protection on.

(5) Entire leak detector evacuated and protected.

(6) Valve block and test port manifold isolated from roughing pump and rest of vacuum system.

4-6.4 COMPLETE SHUTDOWN PROCEDURE

(1) Set the ELECTRONICS and DIFFUSION PUMP circuit breakers to OFF.

(2) Turn the PUMPING MODE switch to the SERVICE VENT position.

(3) Place the plug in the test port or the production fixture in use.

(4) Turn the PUMPING MODE switch to the SERVICE PUMP position and wait until the TEST PORT PRESSURE meter shows 5 to 10 millitorr.

(5) Set the ROUGH PUMP circuit breaker to OFF.

(6) When the diffusion pump has been off for 20 minutes, turn off the FORE PUMP circuit breaker.

These steps will leave the leak detector in the following condition.

(1) All vacuum pumps off.

(2) Spectrometer tube heated.

(3) Entire leak detector evacuated.

If desired, unplug leak detector power cord. This will turn off pilot lights, spectrometer tube heater, optional compressor and close all valves.

4-6.5 PREPARATION FOR SHIPPING

(1) Perform steps 1 through 5 in paragraph 4-6.4.

(2) Disconnect the electrical plugs from the spectrometer tube.

(3) Remove the tube to pack separately. Loosen compression fitting and pull to break vacuum.

(4) Tape or tie the leads to each other and to a nearby support to prevent the excessive swinging of plugs in transit.

(5) Seal the spectrometer tube and the inlet pipe of the pump valve with the red plastic caps or equivalent devices. If one has been punctured, use the intact one on the inlet pipe.

(6) Turn the PUMPING MODE switch to the SERVICE PUMP position.

(7) When the diffusion pump has been off for 20 minutes, set the FORE PUMP circuit breaker to OFF.

(8) Unplug the machine from the main power supply.

(9) Set the ROUGH PUMP circuit breaker to OFF.

This procedure closes all the valves while the roughing pump is still running, permitting the vacuum which has been attained inside the unit to be sealed.

(10) Secure both mechanical pumps to the floor of the leak detector, using 2-1/2 inch long 1/4 inch diameter bolts through the holes provided.

(11) Replace all doors.

(12) Remove the leak indicator unit. Pack it separately, and tape the keys to the countertop.

These steps will leave the leak detector in the following condition, ready for shipment:

(1) Vacuum system completely evacuated.

(2) All valves closed.

(3) All switches off.

(4) All movable items secured.

Be sure to pack the spectrometer tube and the leak indicator unit securely. The leak detector should be packed in a skid-based crate. Shipping weight is approximately 500 pounds. Its classification is electronic equipment.

NOTE

When following OVERNIGHT OR WEEKEND STANDBY procedures, it is recommended that the SENSITIVITY control be turned to LOW (maximum power to diffusion pump). This enhances spectrometer tube cleanliness, reducing normal helium "background" to lowest levels and prolonging intervals between spectrometer tube cleaning.

In following START-UP procedures to resume testing operations, return the SENSITIVITY control to its normal operating position.

SECTION V. COMPLETE TUNING AND CALIBRATION PROCEDURES

NOTE

This procedure is necessary only when the leak detector exhibits no response to helium. If there is some response, refer to paragraph 4-4, Sensitivity and Calibration check.

5-1 GENERAL

A mass spectrometer leak detector operates by sorting helium ions from all other ionized gases and quantitatively presenting on the leak rate meter a reading proportional to the number of helium ions per second reaching the ion collector. So that the user can optimize sensitivity to helium, the following parameters of the spectrometer tube are adjustable (see Figure 5-1):

Parameter	Adjustment Control
1. ELECTRONS ENTERING ION CHAMBER	
a. Quantity per unit time	EMISSION Control
b. Direction	Black knobs on the spectrometer tube
2. IONS LEAVING ION CHAMBER	
a. Energy	ION Control
b. Quantity per unit time	REPELLER Control
c. Direction	FOCUS Control

Since the ion voltage is the most critical parameter in separating helium from other ions, the ten-turn numbered vernier dial (ION Control) is provided. For proper operation, all of the parameters must be adjusted for maximum response, with the exception of the REPELLER voltage control, which is left fully clockwise during normal tuning and operation.

Since the adjustments tend to interact, tuning is a progressive process. The ION, FOCUS, and EMISSION controls must initially be adjusted several times in sequence until the highest possible reading is obtained on the LEAK RATE meter while helium is flowing through the leak detector from a constant-leak source, usually a calibrated leak. As each control is slowly turned, it will generally be noted that the LEAK RATE meter reading rises and falls. The control should be left in the center of the "peak" (highest reading on the meter) and the same thing done to the next control and so on. The source magnet knobs on the spectrometer tube should then be adjusted in the same manner.

To tune and calibrate the spectrometer tube, proceed as follows:

NOTE

Prior to tuning, the leak detector should be operating and ready for use. Refer to the applicable startup procedure, if necessary (Section 4-3).

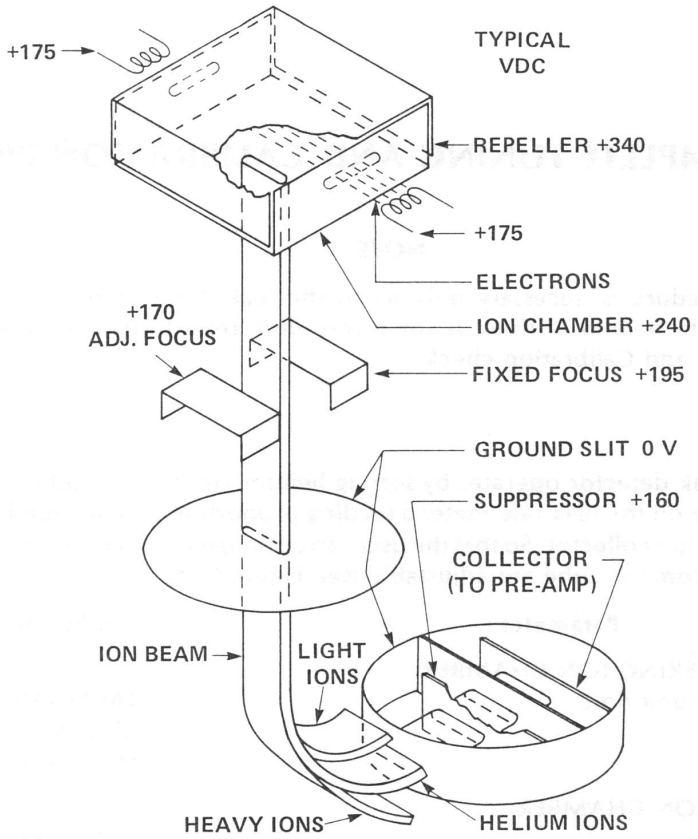

Figure 5-1. Spectrometer Tube Parameters

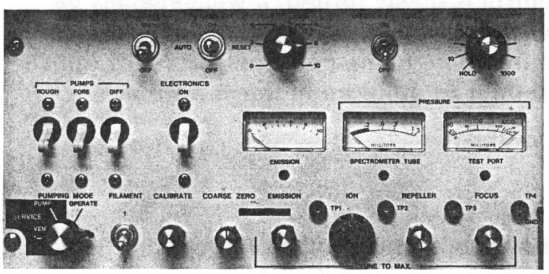

Figure 5-2. Tuning Controls

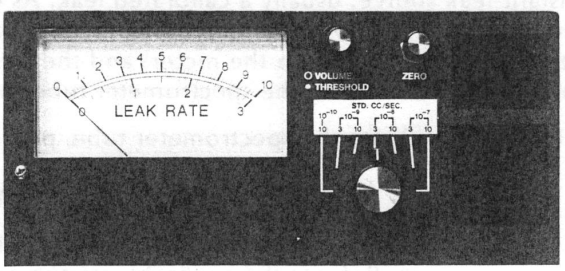

Figure 5-3. Leak Indicator Panel

5-2 COMPLETE TUNING PROCEDURE

(Use only if no response to helium.)

1. Rotate the Range Scale Selector (Figure 5-3) to the appropriate position (Figure 5-4):

For the 936-60:

For the 936-65:

For the 936-70:
(SENSITIVITY control adjusted as in Section 6-8.11 [-70].

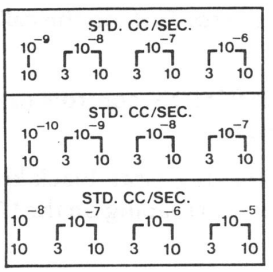

Figure 5-4. Range Scale Block Positions

2. If the optional calibrated leak is not installed in the leak detector, install a calibrated leak in the test port (paragraph 4-4, steps 1 through 3).
3. Turn off the calibrated leak. Refer to Figure 5-2 for steps below.
4. Turn the CALIBRATE adjustment fully counterclockwise for minimum gain.
5. Turn the REPELLER control fully counterclockwise.
6. Set the ION control to zero.
7. Adjust the EMISSION control so that the EMISSION meter shows approximately 1.
8. Set the Range Selector Control (Figure 5-3) fully counterclockwise.
9. Set the ZERO control (Figure 5-3) fully clockwise.
10. Rotate the COARSE ZERO control until the LEAK RATE meter shows one or two minor divisions.
11. Adjust the ZERO control until the LEAK RATE meter reads zero.
12. Adjust the REPELLER control fully clockwise and EMISSION to 5. If the LEAK RATE meter pegs full scale, set the Range Selector control so that the LEAK RATE meter reading is approximately midscale.
13. Turn on the calibrated leak.
14. Adjust the FOCUS and EMISSION controls for maximum LEAK RATE meter indication.
15. As tuning progresses, set the Range Selector control to the most sensitive range that provides an on-scale LEAK RATE indication.

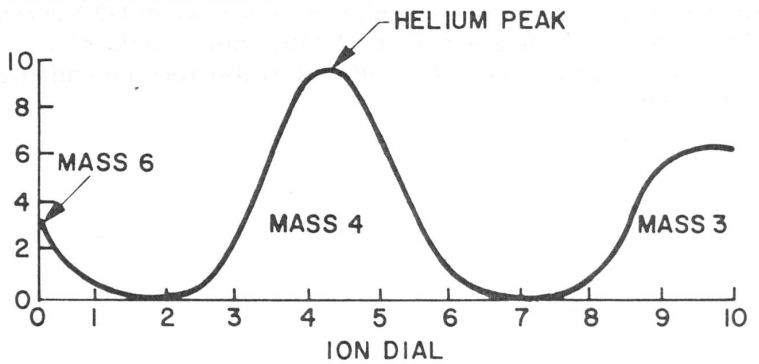

Figure 5-5. Leak Rate Indication as Ion Voltage is Varied

16. Rotate the ION control slowly clockwise from zero until the helium peak is noted on the LEAK RATE meter. As shown in the graph, Figure 5-5, the reading will first drop, then rise to the helium peak, then fall away from the peak and then rise again.

17. To be sure that the helium peak is obtained, turn off the calibrated leak and verify that the LEAK RATE meter reading moves toward zero. Turn on the calibrated leak again. The reading should rise again.

18. Readjust the ION, FOCUS, and EMISSION controls to obtain the maximum reading on the LEAK RATE meter. Repeat as necessary.

19. Adjust both source magnet controls (the large black knobs on the spectrometer tube inside the right-hand side panel) for maximum reading on the LEAK RATE meter. Be sure to replace the side panel after adjustment.

20. Turn off the calibrated leak, and verify that the LEAK RATE meter reading moves toward zero.

21. If necessary, adjust the ZERO control to obtain zero on the LEAK RATE meter.

22. Turn on the calibrated leak.

23. Turn the CALIBRATE control clockwise until the reading on the LEAK RATE meter agrees with the value of the calibrated leak. Note: Direct-reading is achieved on the illustrated range scales, under normal operating conditions. For direct reading on the 10^{-7} to 10^{-4} scale, sensitivity must be reduced. (In the 936-70 the SENSITIVITY control at the back of the turret can also be used for calibration. Allow 10 minutes for the diffusion pump to adjust to the new setting.)

5-3 CALIBRATION FOR DIRECT READING

The 936-60 can be calibrated for direct-reading, using the 10^{-9} to 10^{-6} scale block face. This results in a sensitivity of 2×10^{-10} std cc/sec. If maximum guaranteed sensitivity of 8×10^{-11} std cc/sec is desired, the arbitrary scale block face should be used.

The 936-65 can be calibrated for direct-reading, using the 10^{-10} to 10^{-7} scale block face. This results in a sensitivity of 2×10^{-11} cc/sec.

The 936-70 can be calibrated for direct-reading using the 10^{-8} to 10^{-5} scale block face. This results in a sensitivity of 2×10^{-9} std cc/sec. If maximum guaranteed sensitivity of 4×10^{-10} std cc/sec is desired, the arbitrary scale block face should be used.

In some applications where high gas loads must be pumped and the test port pressure is above 100 millitorr, the SENSITIVITY control (at rear of turret) can be adjusted to or towards LOW as required to keep the SPECTROMETER TUBE PRESSURE in the green band. (All 10 minutes for the diffusion pump adjust to any new setting). Since sensitivity is now reduced, the arbitrary scale is recommended, as it may not be possible to adjust to direct-reading.

5-4 OPERATION AT REDUCED SENSITIVITY

In many situations it is desirable to readjust the leak detector to be less sensitive than provided by the procedure above, particularly if it is necessary to determine larger leak rates. Follow these steps to reduce sensitivity:

1. Turn the CALIBRATE control fully counterclockwise. Note that the reading is now lower.
2. Adjust the SENSITIVITY control (936-70 only) to LOW. Wait 10 minutes.
3. Rotate the Range Scale Selector block to expose the dynamic range for which it is desired to calibrate the leak detector (Figure 5-4).
4. Turn the Range Selector switch to the proper scale to read the calibrated leak being used. The LEAK RATE meter reading is probably now higher than the calibrated leak value.
5. Turn down the EMISSION control until the LEAK RATE meter reads approximately 20% below the calibrated leak value.

NOTE

If emission is reduced below 0.1 on the EMISSION meter, the FIL OFF lamp will light and the LEAK RATE meter will be deactivated. To restore normal operation, increase emission slightly.

6. Adjust the REPELLER control to obtain the highest LEAK RATE meter reading. If the reading is still too high, above the value of the calibrated leak, repeat steps 4 and 5. However, if emission is already set minimum, adjust REPELLER control to obtain the desired LEAK RATE meter reading.
7. Readjust the ION and FOCUS controls for maximum reading on the LEAK RATE meter. These controls should always be adjusted for maximum reading.
8. Readjust the REPELLER control until the reading agrees with the calibrated leak.

4 COMPLETE TUNING PROCEDURE

(Use only if no response to helium.)

1. Rotate the Range Scale Selector (Figure 5-5) to the appropriate position (Figure 5-10):

For the 936-60:

For the 936-65:

For the 936-70:
(SENSITIVITY control adjusted as in Section 6-8.11 [-70].

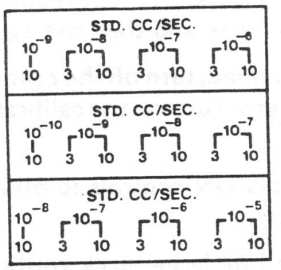

Figure 5-10. Range Scale Block Positions

2. If the optional calibrated leak is not installed in the leak detector, install a calibrated leak in the test port (paragraph 4-4, steps 1 through 3).
3. Turn off the calibrated leak. Refer to Figure 5-4 for steps below.
4. Turn the CALIBRATE adjustment fully counterclockwise for minimum gain.
5. Turn the REPELLER control fully counterclockwise.
6. Set the ION control to zero.
7. Adjust the EMISSION control so that the EMISSION meter shows approximately 1.
8. Set the Range Selector Control (Figure 5-5) fully counterclockwise.
9. Set the ZERO control (Figure 5-5) fully clockwise.
10. Rotate the COARSE ZERO control until the LEAK RATE meter shows one or two minor divisions.
11. Adjust the ZERO control until the LEAK RATE meter reads zero.
12. Adjust the REPELLER control fully clockwise and EMISSION to 5. If the LEAK RATE meter pegs full scale, set the Range Selector control so that the LEAK RATE meter reading is approximately midscale.
13. Turn on the calibrated leak.
14. Adjust the FOCUS and EMISSION controls for maximum LEAK RATE meter indication.
15. As tuning progresses, set the Range Selector control to the most sensitive range that provides an on-scale LEAK RATE indication.

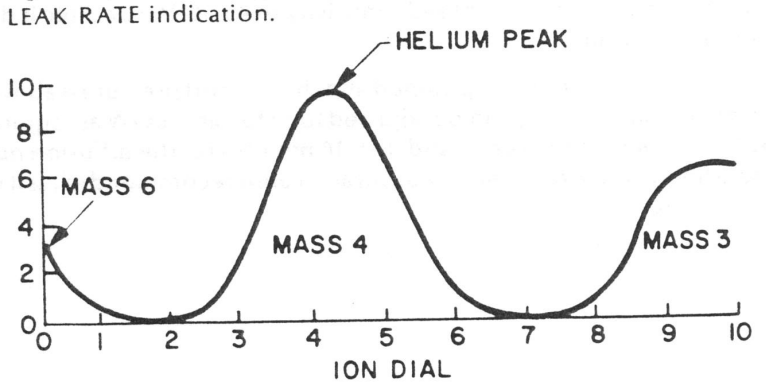

Figure 5-11. Leak Rate Indication as Ion Voltage is Varied

16. Rotate the ION control slowly clockwise from zero until the helium peak is noted on the L RATE meter. As shown in the graph, Figure 5-11, the reading will first drop, then rise tc helium peak, then fall away from the peak and then rise again.

17. To be sure that the helium peak is obtained, turn off the calibrated leak and verify that the l RATE meter reading moves toward zero. Turn on the calibrated leak again. The reading sh rise again.

18. Readjust the ION, FOCUS, and EMISSION controls to obtain the maximum reading or LEAK RATE meter. Repeat as necessary.

19. Adjust both source magnet controls (the large black knobs on the spectrometer tube in the right-hand side panel) for maximum reading on the LEAK RATE meter. Be sure to replac side panel after adjustment.

20. Turn off the calibrated leak, and verify that the LEAK RATE meter reading moves toward z

21. If necessary, adjust the ZERO control to obtain zero on the LEAK RATE meter.

22. Turn on the calibrated leak.

23. Turn the CALIBRATE control clockwise until the reading on the LEAK RATE meter agrees the value of the calibrated leak. Note: Direct-reading is achieved on the illustrated range sc under normal operating conditions. For direct reading on the 10^{-7} to 10^{-4} scale, sensitivity r be reduced. (In the 936-70 the SENSITIVITY control at the back of the turret can also be use calibration. Allow 10 minutes for the diffusion pump to adjust to the new setting.)

5-5 CALIBRATION FOR DIRECT READING

The 936-60 can be calibrated for direct-reading, using the 10^{-9} to 10^{-6} scale block face. This results sensitivity of 2×10^{-10} std cc/sec. If maximum guaranteed sensitivity of 8×10^{-11} std cc/sec is desired, arbitrary scale block face should be used.

The 936-65 can be calibrated for direct-reading, using the 10^{-10} to 10^{-7} scale block face. This results sensitivity of 2×10^{-11} cc/sec.

The 936-70 can be calibrated for direct-reading using the 10^{-8} to 10^{-5} scale block face. This results sensitivity of 2×10^{-9} std cc/sec. If maximum guaranteed sensitivity of 4×10^{-10} std cc/sec is desired, arbitrary scale block face should be used.

In some applications where high gas loads must be pumped and the test port pressure is above 100 m torr, the SENSITIVITY control (at rear of turret) can be adjusted to or towards LOW as required to k the SPECTROMETER TUBE PRESSURE in the green band. (All 10 minutes for the diffusion pump ad to any new setting). Since sensitivity is now reduced, the arbitrary scale is recommended, as it may no possible to adjust to direct-reading.

SECTION VI. MAINTENANCE

936-60 AND 936-65

6-1 INTRODUCTION

Like other quality test equipment, a mass spectrometer leak detector requires periodic maintenance to insure continued reliable operation. For simplicity, in this section, the maintenance functions are grouped by recommended frequency as shown in Table 6-1 below, based on assumed everyday use. This table also serves as an index.

Most of these functions are self-explanatory. All of them can be carried out at routine intervals, as indicated. The sensitivity should always be checked at least once a day and the cold trap should be filled once a day. However, other functions may be carried out either more or less often than shown, depending upon the extent of use of the leak detector.

Some maintenance functions may be required on a demand basis — for example, changing an ion source after filament failure. These are listed in Table 6-2. (They are also included in the complete overhaul.)

The fully solid-state electronic system does not require preventive maintenance. Owing to a thorough 5-day operating check before shipment, component failure is rare and reliability is high. To simplify location and correction of any malfunction that might occur, the complete electronic system is divided into seven physically separate units, each described in Paragraph 6-8.

Paragraph 6-9 describes electrical adjustments and paragraph 6-10 tells how to check the leak detector itself for possible leaks.

NOTE

When servicing the leak detector or any vacuum equipment, cleanliness is vital. There are some techniques more important in leak detector servicing than in general vacuum work. They are:

1. Do not use silicone oil or silicone grease. (Although these products are generally excellent for vacuum systems, they cause loss of sensitivity in mass spectrometer leak detectors through build-up of invisible insulating layers in the spectrometer tube.)
2. Wipe all O-rings clean before installation to insure that no foreign matter is present to impair the seal. Normally it is unnecessary to use vacuum grease. (If vacuum grease or diffusion pump oil is used, avoid silicone types, use sparingly and wipe the O-rings "shiny" dry.) Apiezon L (Varian order number 5000-6954-00-004) is excellent.

See Section VII for troubleshooting hints.

TABLE 6-1
SCHEDULED MAINTENANCE

Paragraph	Description	Daily	Weekly	6 Mos.	12 Mos.
6-2.1	Check sensitivity	X			
6-2.2	Fill cold trap	X			
6-3.1	Clean cold trap		X		
6-3.2	Check mechanical pump drive belt.		X		
6-3.3	Check oil level in mechanical pump.		X		
6-3.4	Check air filter		X		
6-3.5	Check compressed air filter and lubricator.		X		
6-4.1	Change roughing pump oil.			X	
6-4.2	Change forepump oil			X	
6-4.3	Oil blower motor			X	
6-5.1	Oil mechanical pump motors				X
6-5.2	Change mechanical pump belts				X
6-6	Complete overhaul, including: Foreline Manifold Diffusion Pump Spectrometer Tube Cold Trap/Pump Valve Assembly Valve Block Assembly Mechanical Pumps				X

TABLE 6-2
AS-REQUIRED MAINTENANCE

Paragraph	Function	Most Common Symptom
6-7.1	Ion Source Replacement	filament failure (whenever convenient after second filament is in use)
6-7.2	Cold Cathode Gauge Cleaning	instability in spectrometer tube pressure (also whenever ion source is replaced)
6-7.3	Spectrometer Tube Cleaning	instability in leak rate reading and loss of sensitivity
6-7.4 & 6-7.5	Vacuum System and Valves	instability in leak rate reading

OTHER MAINTENANCE INFORMATION

Paragraph	Description
6-8	Electronic System (description)
6-9	Electrical and Electronic Adjustments
6-10	Leak Checking the Leak Detector

6-2 DAILY

6-2.1 SENSITIVITY CHECK

1. Perform sensitivity check as described in paragraph 4-4.
2. If specification still cannot be met, refer to Troubleshooting, Section VII.

6-2.2 FILLING COLD TRAP

Tools: None

Parts: Three liters liquid nitrogen

1. Open door in countertop and pour in liquid nitrogen.
2. One filling should last 24 hours.

6-3 WEEKLY

6-3.1 CLEANING COLD TRAP

Tools: None

Parts: Hot water, paper towels

The cold trap, when filled daily, provides continuous protection from condensible contaminants. These contaminants are frozen and immobilized on the surface of the liquid nitrogen reservoir. They are easily removed once a week by following the steps below:

1. Unlock and open the tuning controls door on electronics.
2. Plug the test port and set START/VENT switch to the RESET position.
3. Turn off the ELECTRONIC circuit breaker.
4. Turn PUMPING MODE switch to the SERVICE VENT position.

NOTE

The cold trap and spectrometer tube operate at a very high vacuum produced by the diffusion pump. Cleaning of the cold trap requires that this vacuum be vented to the atmosphere. However, the diffusion pump must be protected and this is accomplished by the pump valve. The operation of all the valves is automatically controlled by the PUMPING MODE switch to insure safe and proper sequencing. Figure 6-3 shows the position of the valves in SERVICE VENT, SERVICE PUMP and OPERATE modes.

WARNING

Liquid nitrogen is extremely cold. Use with caution.

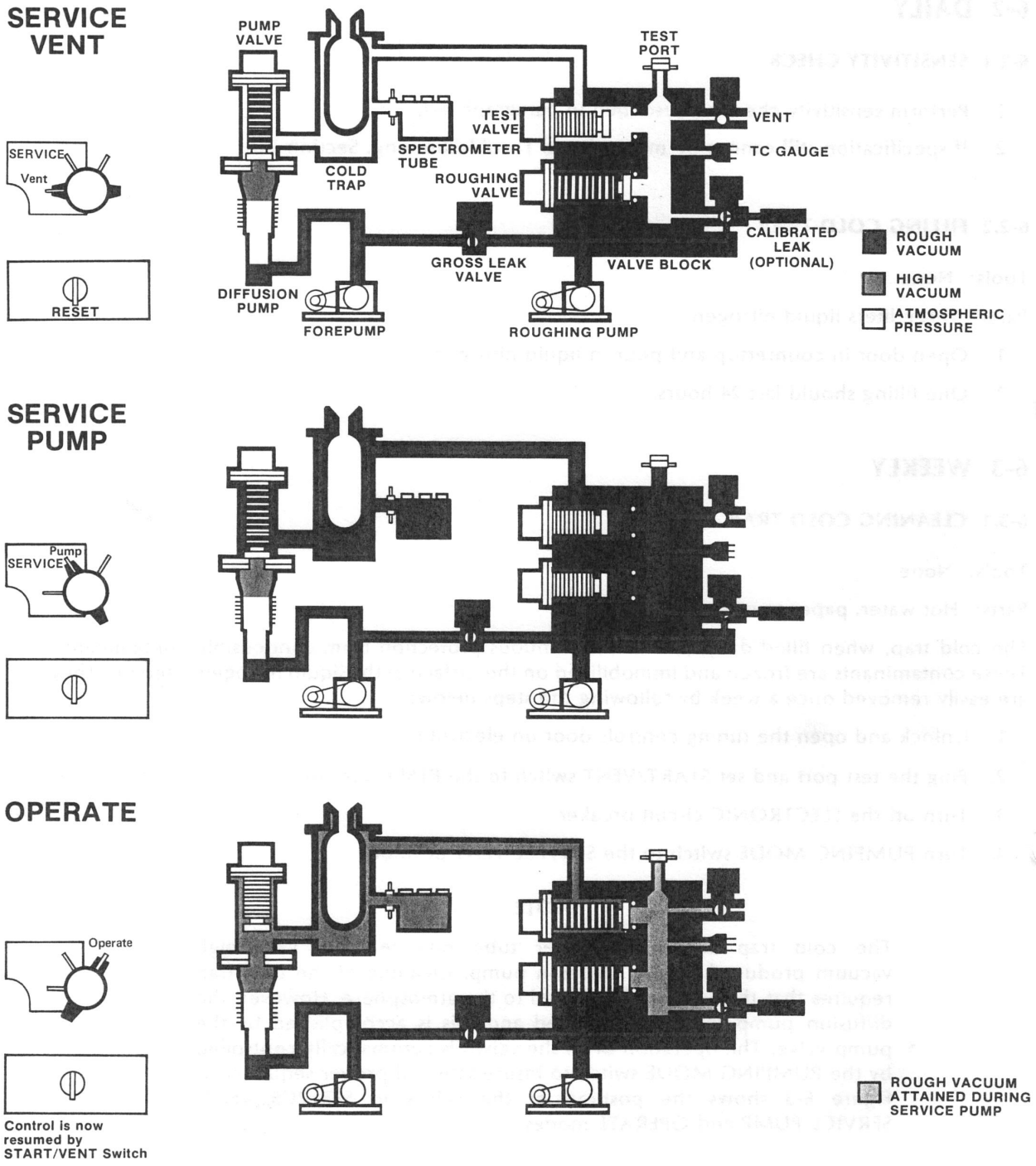

Figure 6-3. Service and Operate Modes, Showing Valve Positions.

5. Open the cold trap door; remove and empty the cold trap (Figure 6-4).
6. Wash outside of cold trap with hot water. Rinse and dry. Use detergent if necessary.
7. Clean and install O-ring* and replace cold trap.
8. Turn PUMPING MODE switch to SERVICE PUMP.
9. When test port pressure reaches 20 mT, turn ELECTRONICS circuit breaker on.
10. Turn PUMPING MODE switch to the OPERATE position and verify that the SPECTROMETER TUBE PRESSURE meter reads upscale.
11. Leave the machine in this manner for the weekend or until ready for use. (See paragraph 4-3 for appropriate start-up procedure.)

6-3.2 DRIVE BELTS

Check for proper tension. (You should be able to depress them about one inch.) If worn, check pulley alignment. Normally, belts need replacement only after many months of operation. (If replacement is necessary, see paragraph 6-5.2 for details.)

6-3.3 OIL LEVEL

Check sight glasses. If the level is low, add Welch Duo-Seal pump oil until the level is between the marks in the sight glass, when running.

6-3.4 AIR FILTER

Tools: Screwdriver

Parts: Standard furnace air filter 10" x 20" x 1"

Replace or reverse air filter if inspection shows large amount of accumulated dirt on filter or if diffusion pump shuts off due to lack of air flow. Replace filter at regular intervals. If necessary, dust can be removed by tapping or blowing gently with compressed air.

1. Remove rear panel.
2. Remove filter and reinstall so that clean end of filter is on the fan side (Figure 6-5).
3. Replace rear panel. NOTE: DO NOT OPERATE WITHOUT FILTER!

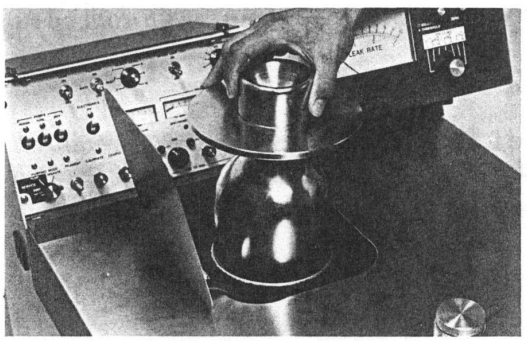

Figure 6-4.

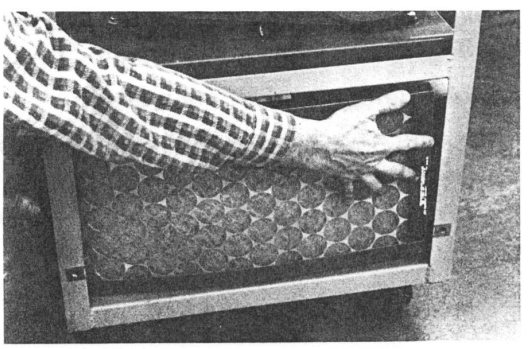

Figure 6-5.

arker 2-256.

6-3.5 AIR LINE FILTER AND LUBRICATOR

Tools: Screwdriver and Pliers

Parts: Welch Vacuum Pump Oil or good grade of 20W non-detergent oil.

1. Remove front and right panels.
2. Empty filter bowl if water or sediment is present. (Valve on bottom is turned counterclockwise as viewed through the bowl.)
3. Verify that line air pressure is above 70 psig. If built-in compressor is used, verify that it turns on at 70 psig if pressure is bled to that level (through valve on bowl). See Section 6-9.7 if adjustments are necessary.
4. Fill the lubricator with Welch pump oil or equivalent.
5. Turn the needle valve (using screwdriver) fully clockwise, then slightly counterclockwise not more than 1/8 turn.

CAUTION

The transparent, unbreakable polycarbonate bowl and other plastic parts should be cleaned with pure soap and water only. Detergents and other cleaning liquids should not be used.

6.4 SEMI-ANNUAL

6-4.1 ROUGH PUMP OIL CHANGE

Tools: Screwdriver, pliers, funnel, 3/8" rubber or plastic hose, drain pan

Parts: Welch pump oil, Varian ordering number 5027-6954-27-008 (one gallon)

Change the roughing pump oil every six months or if unable to pump below 20 millitorr. Proceed as follows:

1. Turn off rough pump and with test port open, move the START/VENT switch to START. This will vent the rough pump.
2. Disconnect roughing manifold at the valve block and slide off Tygon hose.
3. Disconnect red hose at pump outlet.
4. Plug inlet with a suitable stopper.
5. Turn on rough pump circuit breaker and open vented exhaust valve.
6. Connect a small hose to the drain valve. Open drain valve and place palm of hand over the exhaust. This will force the oil out of the drain. Hold until oil stops flowing.
7. Remove plug and pour 1 cup of oil into the inlet. Hold hand over exhaust again until oil stops flowing. Repeat until oil runs clean.
8. Turn off pump and close drain valve.
9. Refill with proper charge of fresh oil (see Figure 6-6). The standard 5.6 cfm pump requires 2.3 quarts of Welch Pump oil. The optional 10.6 cfm pump requires 2.5 quarts of Welch Pump oil.

   Fill so that oil level is between the two lines on the sight glass when the pump is operating.
10. Reconnect outlet hose.
11. Reinstall roughing manifold.
12. Restart pump.

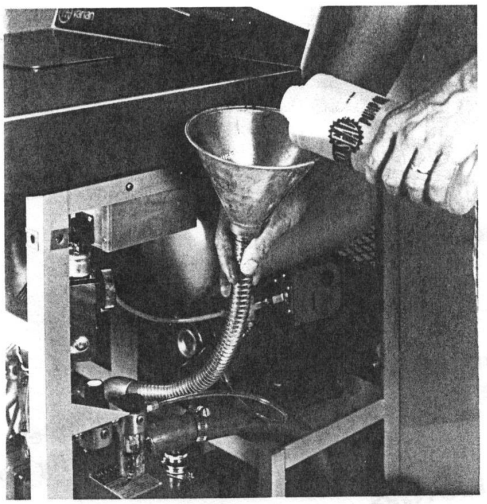

Figure 6-6.

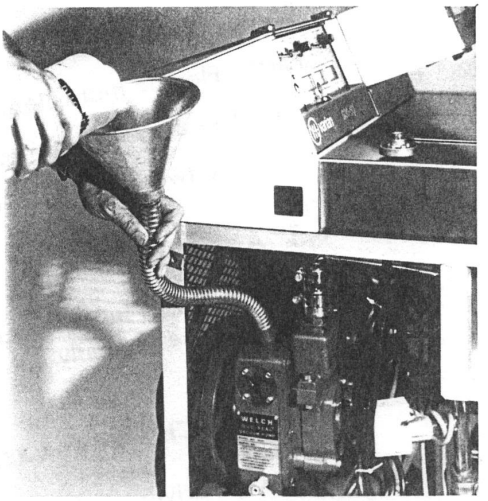

Figure 6-7.

6-4.2 FOREPUMP OIL CHANGE

Tools: Screwdriver, pliers, funnel, 3/8" rubber or plastic hose, drain pan

Parts: Welch pump oil, Varian ordering number 5027-6954-27-008 (one gallon)

Change the foreline pump oil every six months or if unable to pump below 50 millitorr with diffusion pump cold. Proceed as follows:

1. Plug the test port, then turn PUMPING MODE switch to the SERVICE PUMP position. (Figure 6-3 shows valve positions.)
2. Turn off diffusion pump.
3. Wait 20 minutes, then turn off forepump.
4. Loosen hose clamp on inlet and slowly slide hose off nozzle. This will vent the pump gradually.
5. Remove outlet fitting.
6. Plug inlet with a suitable stopper.
7. Turn on forepump circuit breaker.
8. Connect small hose to the drain valve. Open drain valve and place palm of hand over the exhaust hole. This will force the oil out of the drain. Hold until oil stops flowing.
9. Remove plug and pour 1 cup of Duo-Seal oil into the inlet. Hold hand over exhaust again until oil stops flowing. Repeat until oil runs clean.
10. Turn off pump and close off drain valve.
11. Refill with proper change of fresh Duo-Seal (0.6 quart). (See Figure 6-7.) Fill so that oil level is between the two lines on the sight glass when pump is operating.
12. Replace outlet cap and inlet hose.
13. Start foreline pump and diffusion pump.
14. After 30 minutes, move the PUMPING MODE switch to the OPERATE position.

6-4.3 OIL BLOWER MOTOR

Tools: Screwdriver

Parts: Electric motor lubricating oil.

1. Use a good grade of light electric motor lubricating oil.
2. Use two or three drops at each end of motor in holes provided.

6.5 ANNUAL

The items shown below should be done annually. See also paragraph 6-6 (Complete Overhaul) is usually done annually but which may be done less or more often, depending upon usage.

6-5.1 OIL MECHANICAL VACUUM PUMP MOTORS

Tools: Screwdriver

Parts: Electric motor lubricating oil

1. Use a good grade of light electric motor lubricating oil.
2. Use two or three drops at each end of motor in holes provided.

6-5.2 MECHANICAL PUMPS, BELT CHANGE (FOREPUMP AND ROUGHING PUMPS)

Tools: Screwdriver, 1/2 inch box/open-end wrench.

Parts:

Pump Size	Belt Size	Varian Ordering No.
1400 B (0.9 CFM)	4L340	0981-6602 09 100
1402 B (5.6 CFM)	4L415	0981-6602 09 125
1376 B (10.6 CFM, Optional)	4L415	0981-6602 09 125

1. Shut off pump and replace belt with new one of proper size.
2. The tension should be just sufficient to drive the pump without visible slippage. About one inch of movement should be possible when pressing the belt.

6.6 COMPLETE OVERHAUL

6.6.1 GENERAL

After prolonged use, the leak detector will accumulate contaminants from even the "cleanest" of products tested. These contaminants will eventually impair operation. A thorough dismantling and cleaning of the vacuum system (including the spectrometer tube) will restore normal operation.

The following procedures, if done annually —for a leak detector in daily use, will prevent deterioration and sustain a high level of performance. For heavy production use, more frequent overhauls may be desirable; conversely, lighter use may permit a longer period between overhauls. In most cases this work is done by the user's maintenance personnel, but it may also be done by Varian under the terms of a service contract.

The complete overhaul is detailed in the following pages and includes service of the following components:

Foreline Manifold
Diffusion Pump
Spectrometer Tube
Cold Trap/Pump Valve Assembly
Valve Block Assembly
Mechanical Pumps

The following are required:

Tools: Screwdrivers (regular and Phillips); 7/16-inch open end and box wrench; 7/16-inch socket wrench with extensions and ratchet; 9/16-inch open end wrench; and pliers.

Parts: O-ring kit; Santovac 5, 65 cc; trichloroethane (TCE); methanol

NOTE

It is recommended that new O-rings be used when reassembling vacuum system. A complete kit is available (Varian Ordering Number: **0981-K4372-801**).

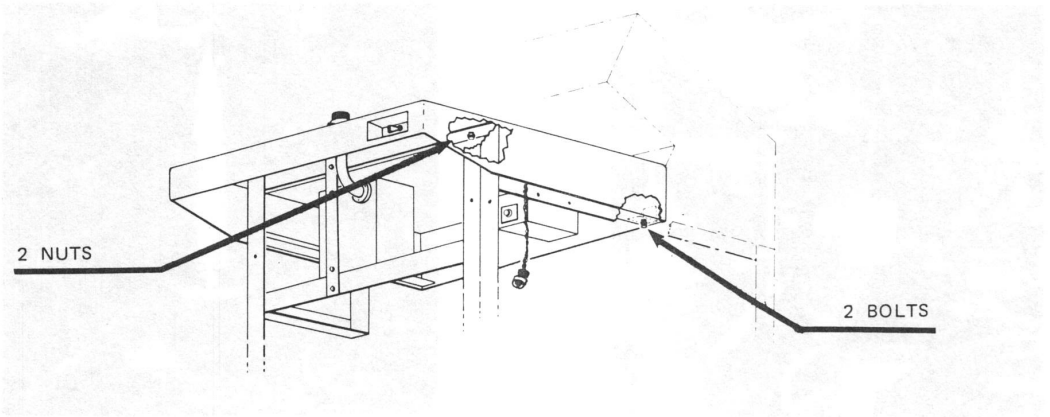

Figure 6-8. Removing Stainless Steel Counter Top

6-6.2 PREPARATION

1. Set the ELECTRONICS and DIFFUSION PUMP circuit breakers to OFF.
2. Turn the PUMPING MODE switch to the SERVICE VENT position.
3. Remove cold trap. Pour out any residual liquid nitrogen, wash the outside surface of the cold trap with hot water. (Use detergent if necessary.) Rinse thoroughly and wipe completely dry with lint-free cloth or paper towel.
4. Wipe off O-ring with lint-free cloth and replace cold trap, making sure it is centered and properly seated on the O-ring.
5. Be sure that the test port (or the production fixture) is open.
6. Set the ROUGH circuit breaker to OFF.

7. Turn the PUMPING MODE switch to the SERVICE PUMP position.
8. When the diffusion pump has been off for 20 minutes, turn off the FOREPUMP circuit breaker.
9. Unplug power cord.
10. Remove all four access panels.
11. Disconnect shop air (or remove quick-disconnect fitting from built-in compressor).
12. Vent compressed air system by opening the valve on the bottom of the filter bowl.
13. Remove stainless steel counter-top.
    a. Unplug cable from the back of the START/VENT switch and allow to hang free.
    b. Using 7/16-inch socket wrench, remove the two nuts in the front top frame member and the two bolts at the rear of the side frame members (Figure 6-8).
    c. Unscrew the test port nut, plug, and the flat nut on the test port and set aside.
    d. Lift the front of the counter top free of the test port and remove. Set it aside.

NOTE

The counter top can be restored to nearly new condition by scrubbing it with Scotch-Brite or Beartex. Use long strokes, *only* from side to side, *not* front to back *or* rotary.

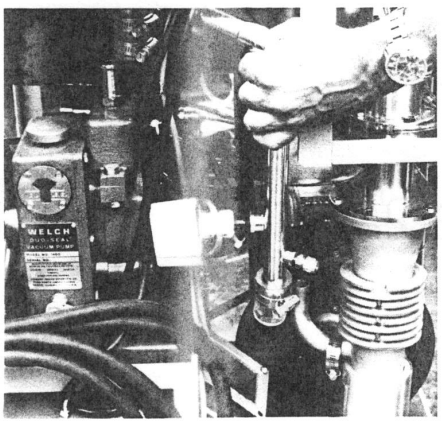

Figure 6-9. Removing Foreline Manifold

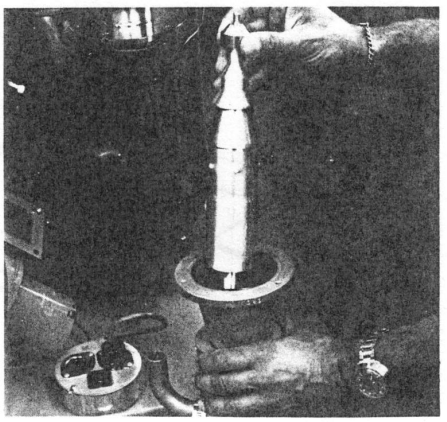

Figure 6-10. Lifting Jet Assembly Out of Diffusion Pump

6-6.3 FORELINE MANIFOLD, REMOVE AND CLEAN

1. Loosen hose clamps at either end.
2. Unplug pressure switch at junction box.
3. Loosen compression fitting holding gross leak line.
4. Remove manifold from machine (see Figure 6-9).
5. Remove Tygon tubing. Replace if cracked or stiff.
6. If necessary, wash foreline assembly, first removing vacuum switch and thermocouple vacuum gauge. Trichloroethane (TCE) is recommended — preferably hot — followed by methanol (methyl alcohol) and thorough drying.

6-6.4 DIFFUSION PUMP, REMOVE AND CLEAN

1. Unplug the diffusion pump heater from the junction box near the bottom of the pump.
2. Remove the three Phillips head screws securing the diffusion pump inlet flange to the pump valve, and move the pump to a work area. Do not lose the spring on the top of the jet.
3. Clean and recharge the diffusion pump as follows:
   a. Remove the spring and carefully lift out the jet assembly (Figure 6-10). Wipe excess oil from jet.
   b. Pour out and discard used pump fluid, while pump is warm. Rinse out pump with TCE (heated by plugging in pump for 5 minutes). Then rinse with methanol and dry.
   c. Dismantle jet assembly and clean as above.
   d. Using fine abrasive paper, remove any baked-on deposits of carbon from the jet parts.
   e. Rinse all parts as above.
   f. Reassemble jet.

NOTE

An alternative to the TCE-methanol procedure is methanol, followed by acetone (to remove any hydrocarbons not removed by methanol). Then rinse with methanol and dry.

6-6.5 SPECTROMETER TUBE*; REMOVE, CLEAN AND REASSEMBLE

1. Remove the three electrical plugs at the top of the spectrometer tube. Unplug the spectrometer tube heater. Loosen the compression fitting and remove the spectrometer tube to a convenient bench. (Figure 6-11 is an "exploded" view of the spectrometer tube.)

CAUTION

Avoid placing the magnet on a steel or iron surface to prevent weakening the magnetic field.

2. Remove the compression fitting parts and the three mounting screws and take off the magnet assembly (Figure 6-11a). DO NOT DISASSEMBLE THE MAGNET.
3. Slide heater out of its recess.
4. Remove the cold cathode gauge, the ion source and the preamplifier. Discard the ion source, but handle the other two parts by flanged pin end only, to prevent contamination by skin contact. KEEP ONE HAND ON SPECTROMETER TUBE BODY WHEN REMOVING OR INSERTING PREAMPLIFIER to prevent damage by static discharge.
5. Slip out the baffle (Figure 2-1) between the cold cathode gauge and the ion source cavities. Carefully remove the ground slit plate with "shoe hook" or thin screwdriver from the ion source cavity.
6. Using fine abrasive paper, remove heavy deposits from all surfaces of spectrometer tube body, baffle, ground slit plate, cold cathode gauge liner and anode loop, until bare metal surfaces are exposed. (NOTE: Do not use crocus cloth, as it leaves a residue.)

*Rebuilt spectrometer tubes (Varian #9109-K4565-301) are available from Varian Lexington Vacuum Division on an exchange basis. Contact nearest Varian Vacuum Division office for details.

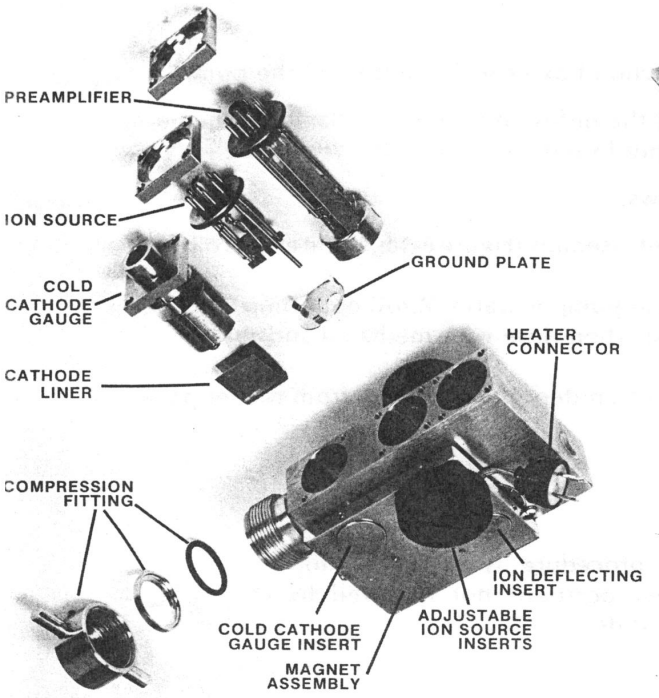

Figure 6-11. Spectrometer Tube (Exploded View)

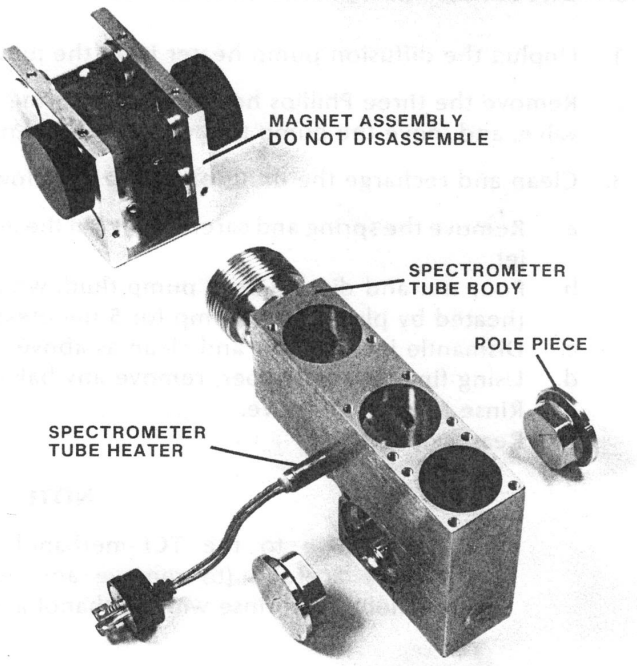

Figure 6-11a. Magnet Assembly, Heater and Pole Pieces

7. Remove four Phillips screws on each side of the tube body and slip out both pole pieces. Remove the O-rings and then clean these with the spectrometer tube body, avoiding use of abrasives to preserve the plating. Pole pieces are interchangeable.

8. The spectrometer tube body, pole pieces, baffle, ground slit plate and cold cathode gauge parts may now be boiled for 20 to 30 minutes in Alconox solution,* rinsed with hot water, methanol and dried. (Baking in an oven to 150°C (300°F) is desirable, but not essential.) Do not use acetone for cleaning the spectrometer tube.

9. Reassemble the tube, heater, pole pieces and magnet assembly. When installing ground slit plate, be sure that snap prongs are facing up. Align slit at 90° with sidewall of spectrometer tube and/or concentrically align circular hole in plate with smaller guide hole in bottom of ion source cavity.

10. Wipe the new O-ring and mating surfaces with clean lint-free cloth and place new ion source in cavity. Locating pin should be approximately in center of guide hole. Be sure that pins 1 and 8 are parallel to the sidewall of the spectrometer tube (Figure 6-12). Tighten hold-down flange evenly and firmly. (A straight edge held against pins 1 and 8 of both octal arrays is a convenient way to assure parallelity.)

11. Install preamplifier and cold cathode gauge, using new O-rings. Tighten clamps evenly and securely.

12. Set assembled spectrometer tube in a clean place. Protect the inlet from dust.

*1/2 teaspoon per quart of water.

6-6.6 COLD TRAP HOUSING ASSEMBLY (INCLUDES PUMP VALVE), REMOVE AND SERVICE

1. Unplug orifice solenoid (936-65 only).
2. Using the 7/16-inch open-end wrench, remove the two bolts securing the trap housing to the rear of the valve block, and the nut and bolt securing it to the bracket near the forepump. Remove nuts under the pump valve flange (Figure 6-13).

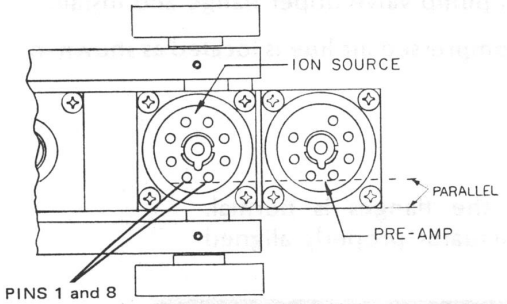

Figure 6-12.

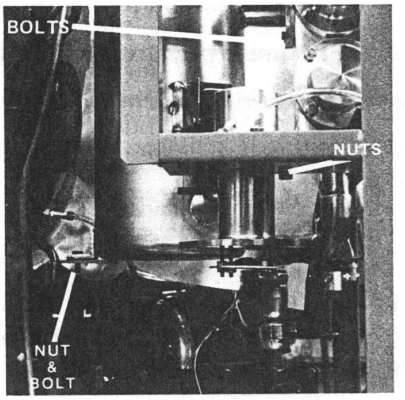

Figure 6-13. Preparing to Remove Cold Trap Housing

3. Using the screwdriver, disconnect compressed air line from pump valve actuator.
4. Lift out the cold trap housing, complete with pump valve (Figure 6-14).
5. Using a 7/16-inch wrench, remove the four bolts securing the pump valve actuator to the valve body, backing them out evenly to avoid binding as the valve spring expands. Lift out the actuator (Figure 6-15). Wash the bellows and sealing disc with methanol and dry thoroughly. If the bellows is to be replaced, see paragraph 6-7.5.
6. Remove the pneumatic cylinder ("top hat") from the piston and check the piston for lubricant. There should be oil on the cylinder (from the air line lubricator) and grease on the piston. Replenish the grease, if necessary, with Lubriplate 55555, or equivalent.

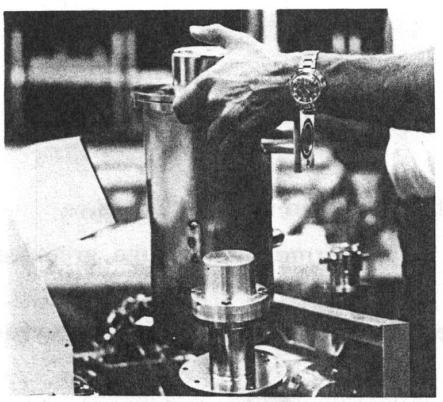

Figure 6-14. Removing Cold Trap Housing

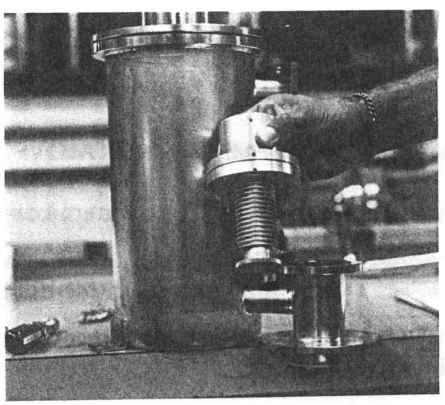

Figure 6-15. Lifting Out Pneumatic Actuator (Bonnet and Trim)

7. Reach one or two fingers into the pump valve body and lift out the O-ring retaining ring and then the O-ring. If fresh O-rings are available, discard the old one.
8. Wash the complete pump valve body assembly with methanol and dry thoroughly. If the nuts securing the baffle are disturbed, reposition them and tighten *securely* so that the baffle flange is 0.56 +0.02 inches (14.2 +0.5mm) from the underside of the pump valve flange (Figure 6-16).
9. Install new O-ring in pump valve body, placing it carefully in the recess.
10. Install O-ring retainer, pressing it down firmly all around.
11. Clean or replace O-ring between bellows flange and pump valve upper flange and install.
12. Install pneumatic actuator. Be sure the hole for the compressed air line is located as shown in Figure 6-17.

NOTE

The gap of approximately 3/16" between the flanges is normal. Tighten the four bolts evenly to keep valve actuator properly aligned as the spring is compressed.

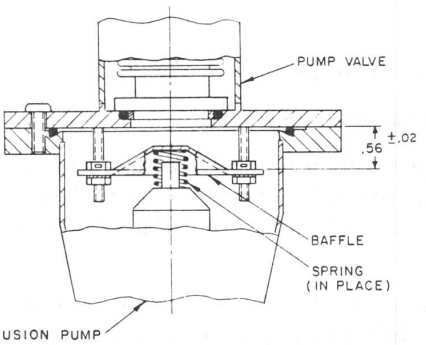

Figure 6-16. Correct Baffle Position

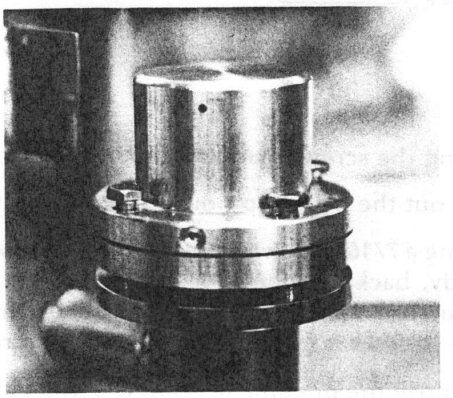

Figure 6-17. Pneumatic Actuator (Ready for Bolt Tightening—Note Gap)

6-6.7 VALVE BLOCK ASSEMBLY, REMOVE

1. Using a screwdriver, disconnect compressed air lines from the two valve actuators.
2. Disconnect all electrical plugs at the valve block; vent valve, thermocouple gauge, gross leak valve, calibrating leak valve, (if this option is present).
3. Using a Phillips screwdriver, remove the three screws securing the roughing line to the bottom of the valve block.
4. Using a 7/16-inch wrench, remove the top and bottom bolts from the front of the valve block bracket. Lift the valve block assembly to clear the frame cross-member, then swing the bottom clear and remove (Figure 6-18).

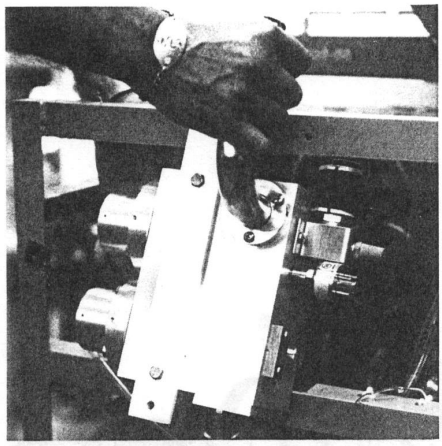

Figure 6-18. Lifting Valve Block Assembly Clear of Frame

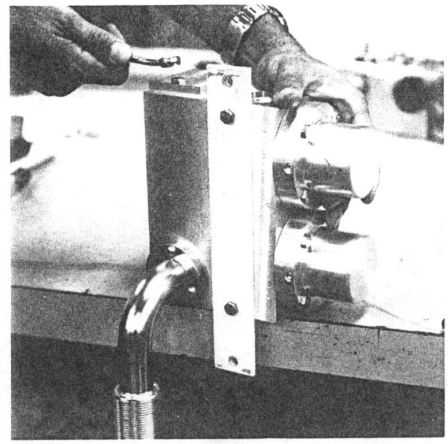

Figure 6-19. Removing Cover Plate from Inverted Valve Block

6-6.8 VALVE BLOCK ASSEMBLY, DISASSEMBLE AND CLEAN (Figure 6-21 is an "exploded" view)

1. Remove screws holding vent valve (4) and calibrating leak (17), then remove the gross leak valve (33), vent valve (with its O-ring retainer), calibrating leak and thermocouple gauge (11) from the valve block by pulling straight out. Set them aside.
2. With the valve block inverted, remove the cover plate (28) from the bottom (Figure 6-19). Clean it, wipe the O-ring and set them aside.
3. Remove test port manifold (24).
4. Place the valve block on a soft surface (rubber or cloth pad) with the valve actuators up. Use a 7/16-inch wrench to remove each of the actuators, backing out the screws evenly to avoid binding as the valve spring expands.
5. Lift out the actuator (Figure 6-20). Wash the bellows and sealing disc with methanol and dry thoroughly. If the bellows is to be replaced, see paragraph 6-7.5.
6. Remove the pneumatic cylinder ("top hat") from the piston and check the piston for lubricant. There should be oil on the cylinder (from the air line lubricator) and grease on the piston. Replenish the grease, if necessary, with Lubriplate 55555, or equivalent.

NOTE

Be very careful not to contaminate any part of the vacuum system or O-rings with this grease.

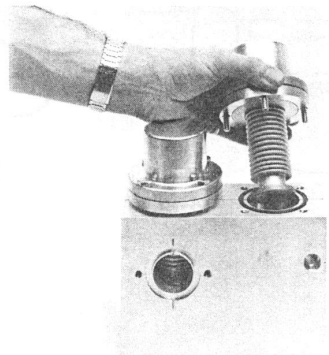

Figure 6-20. Removing Actuators from Valve Block

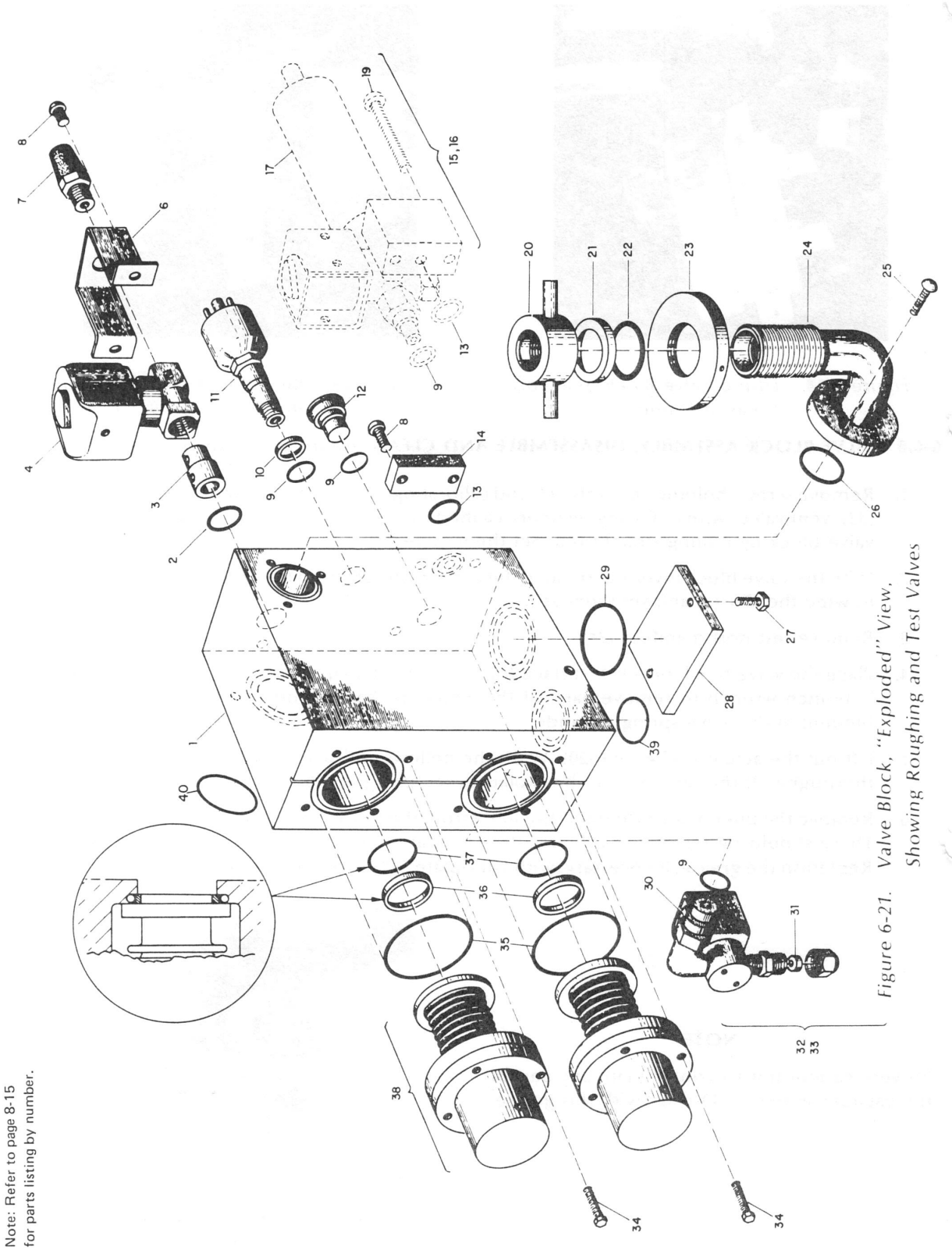

Figure 6-21. Valve Block, "Exploded" View, Showing Roughing and Test Valves

Note: Refer to page 8-15 for parts listing by number.

7. Reach one or two fingers into the valve cavity and lift out the O-ring retaining ring and then the O-ring. If fresh O-rings are available, discard the old one.
8. Check entire valve block and remove any remaining O-rings. DO NOT USE METAL TOOL TO REMOVE ANY O-RING.
9. Clean valve block with methanol and dry thoroughly.

6-6.9 ROUGH PUMP AND FOREPUMP, SERVICE

1. Perform appropriate work in paragraphs 6-3 and 6-4 if required at this time. See Schedule 6-1.
2. Remove and clean the roughing line.
3. Install roughing line. Do not tighten hose clamps yet.

NOTE

Replace Tygon tubing if cracked or stiff.

6-6.10 REASSEMBLE AND INSTALL VALVE BLOCK ASSEMBLY

1. Replace O-rings in rough and test valve cavities. Be sure they are properly in the recess provided.
2. Install O-ring retaining rings in both cavities, pressing them down all around.
3. Clean or replace O-rings between bellows flange and valve block and install.
4. Install the actuators. Be sure the compressed air inlet holes are at the front of the block.

NOTE

The gap of approximately 3/16" between the flanges is normal. Tighten the four bolts evenly to keep valve actuator properly aligned as the spring is compressed.

5. Install the test port manifold and O-ring.
6. Install the cover plate and O-ring on the bottom of the valve block.
7. Clean O-ring and sealing surface of gross-leak valve and install at back of block.
8. Clean the O-ring and sealing surfaces of the vent valve and O-ring retainer, and install, tightening the clamp securely.
9. Clean the O-ring and sealing surfaces and install the 531 thermocouple gauge or new gauge tube.
10. Clean the O-rings and sealing surfaces and install the calibrating leak (optional) or cover plate and plug.
11. Place valve block in cabinet, upper end first.
12. Install two hex-head bolts, finger-tight, securing the valve block mounting plate to the frame.
13. Clean the O-ring for the roughing line flange, place it in position at the bottom of the block, and install three Phillips screws, finger tight.

6-6.11 INSTALL COLD TRAP HOUSING ASSEMBLY (INCLUDES PUMP VALVE)

1. Place cold trap housing assembly in cabinet, with the pump valve actuator bolts protruding through the holes in the diffusion pump support bracket.
2. Place the O-ring in the groove at the back of the valve block and install two hex-head bolts through the flange finger tight.
3. Line up the hole in the cold trap bracket with the hole in the support bracket and install a hex-head bolt and nut, finger tight.
4. Tighten the two bolts at the front of the block, securing it to the frame.
5. Tighten the two hex-head bolts securing the cold trap housing to the back of the valve block.
6. Thread three nuts onto the bolts at the diffusion pump support bracket and tighten them.
7. Tighten the nut and bolt at the back of the cold trap housing.
8. Tighten the three Phillips screws at the roughing line flange.
9. Tighten the hose-clamps at the roughing pump. Locate the clamps close to the ends of the metal tubing (Figure 6-22). This minimizes the area of Tygon surface exposed to vacuum.

6-6.12 INSTALL DIFFUSION PUMP

1. Install jet in diffusion pump body so that two of the five guide protrusions straddle the foreline opening. Be sure that the jet is firmly seated (top approximately 1/2 inch below pump flange) (Figure 6-23).
2. Pour in 65 cc of Santovac 5 diffusion pump fluid.
3. Place new O-ring in groove.
4. Place spring on top of jet.
5. Install diffusion pump with foreline toward the back of the cabinet.

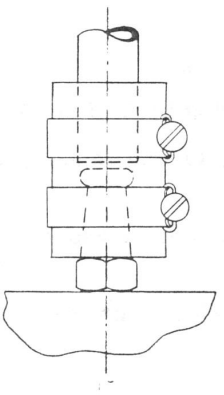

Figure 6-22. Optimum Location of Clamps to Minimize Area of Tygon Exposed to Vacuum

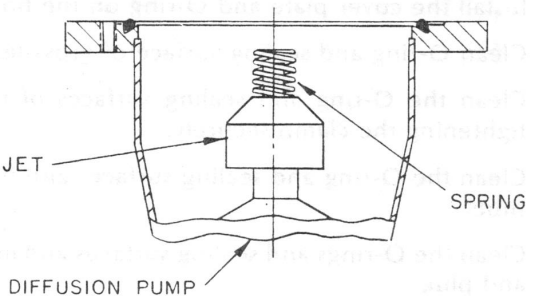

Figure 6-23. Position of Jet Top When Jet is Firmly Seated

6-6.13 INSTALL FORELINE MANIFOLD

1. Using the original or replacement Tygon tubing, install the foreline manifold in the cabinet and tighten hose clamps (Figure 6-22).
2. Clean the rubber sealing bushing on the gross leak line, lubricate lightly with Apiezon L, and connect it.
3. Plug the cords from the diffusion pump heater and the foreline pressure switch into the junction box.

6-6.14 INSTALL SPECTROMETER TUBE

1. Tighten compression fitting securely.
2. Connect the heater, preamplifier, ion source and high voltage leads.

6-6.15 PNEUMATIC HOOKUP

1. Connect the air-line labelled 2 to the rough valve actuator (stamped 2).
2. Connect the air-line labelled 1 to the test valve actuator (stamped 1).
3. Connect the remaining air-line to the pump valve actuator.

6-6.16 ELECTRICAL HOOKUP

1. Connect the lugs on the white/violet and **red** wires to the gross leak valve (in all of these steps, the orientation of the plug is immaterial).
2. Connect the lugs on the white/violet and **black** wires to the vent valve.
3. Connect the lugs on the white/violet and **blue** wires to the calibrating leak valve.
4. Connect the lugs on the long white/violet and **red** wires to the orifice solenoid (936-65 only).
5. Connect the thermocouple gauge.
6. Check that all cords from pumps, compressor (if present), spectrometer tube and valve control cables are connected. (See Figure 6-24.)

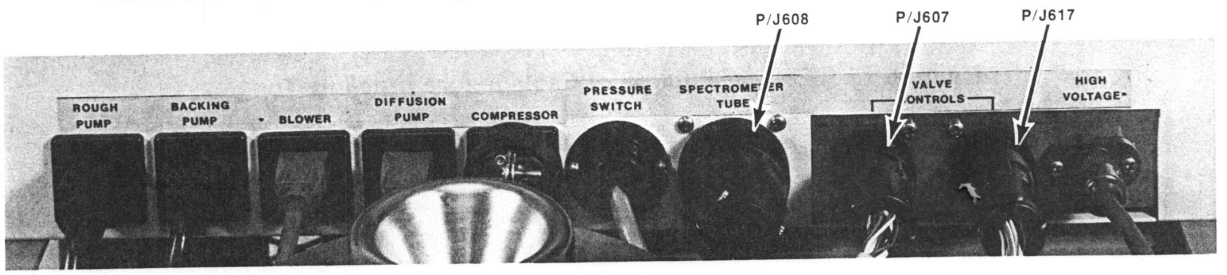

Figure 6-24.

7. Check that cooling air filter is clean and in place.

8. Replace rear panel.
9. With all circuit breakers off, plug the machine into appropriate power source. Compressor (if present) will start.
10. If no compressor is present, reconnect to the source of compressed air.

6-6.17 CHECK OUT FOR RETURN TO SERVICE

1. Remove START/VENT switch assembly from the stainless steel top by unscrewing knurled nut at base of switch handle. Connect switch assembly to cable to permit operation of the leak detector while the top is off.
2. Refer to paragraph 4-3.2 and follow steps for start-up. Verify each step as it happens (sides and tops are still off machine).
3. When the leak detector is fully operational, use a helium probe and check all joints for leakage (see paragraph 6-10).
4. When all leaks have been corrected, replace the stainless steel top and bolt down with the two bolts and two nuts (see paragraph 6-6.2), first routing the cable as shown in Figure 6-25.
5. Install START/VENT switch assembly in stainless steel top, tightening knurled nut.
6. Replace side and front panels.

Annual maintenance is complete and leak detector is now ready for operation.

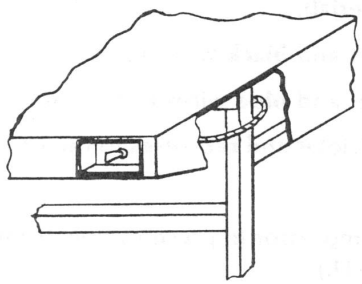

Figure 6-25. Correct Routing of Cable Before Installing Top

6-7. AS-REQUIRED MAINTENANCE

6-7.1 ION SOURCE REPLACEMENT

Tools: Screwdriver

Parts: Replacement ion source

The ion source has two filaments. The spare is turned on by the FILAMENT SELECTOR switch behind the locked access panel (Figure 6-27). Slight retuning may be desirable to obtain maximum sensitivity; however, the filaments are usually close to the same adjustment.

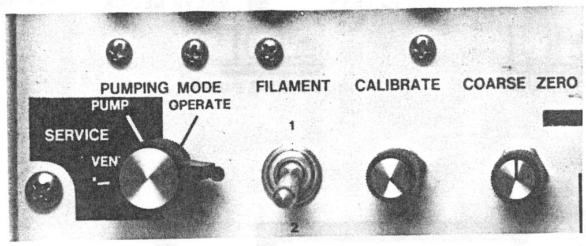

Figure 6-27.

The filaments have long life. However, if ultimate failure of the spare filament will upset critical production testing, the ion source may be replaced as soon as convenient after the spare has been put into use (replacement takes about 10 minutes). Otherwise, just use the spare as long as it lasts, then discard the source.

The cold trap and spectrometer tube operate at a very high vacuum produced by the diffusion pump. Service of the spectrometer tube requires that this vacuum be vented to the atmosphere. However, the diffusion pump must be protected and this is accomplished by the pump valve. The operation of all the valves is automatically controlled by the PUMPING MODE switch to insure safe and proper sequencing. Figure 6-26 shows the position of the valves in the SERVICE VENT and two pumping modes. Proceed as follows:

1. Open the tuning controls door.
2. Place the START/VENT switch in the RESET position.
3. Turn electronics off.
4. Turn PUMPING MODE switch to the SERVICE VENT position.
5. Open the cold trap door; remove and empty the cold trap.
6. Wash outside of cold trap with hot water. Rinse and dry.
7. Clean and install O-ring and replace cold trap.

Now remove the spectrometer tube and exchange ion sources as follows:

8. Remove right side panel. Remove the three electrical plugs at the top of the spectrometer tube. Unplug the heater. Loosen the compression fitting and remove the spectrometer tube to a convenient bench. (Figure 6-28 is an "exploded" view of the spectrometer tube.)

CAUTION

Avoid placing the tube on a steel or iron surface to prevent weakening the magnetic field.

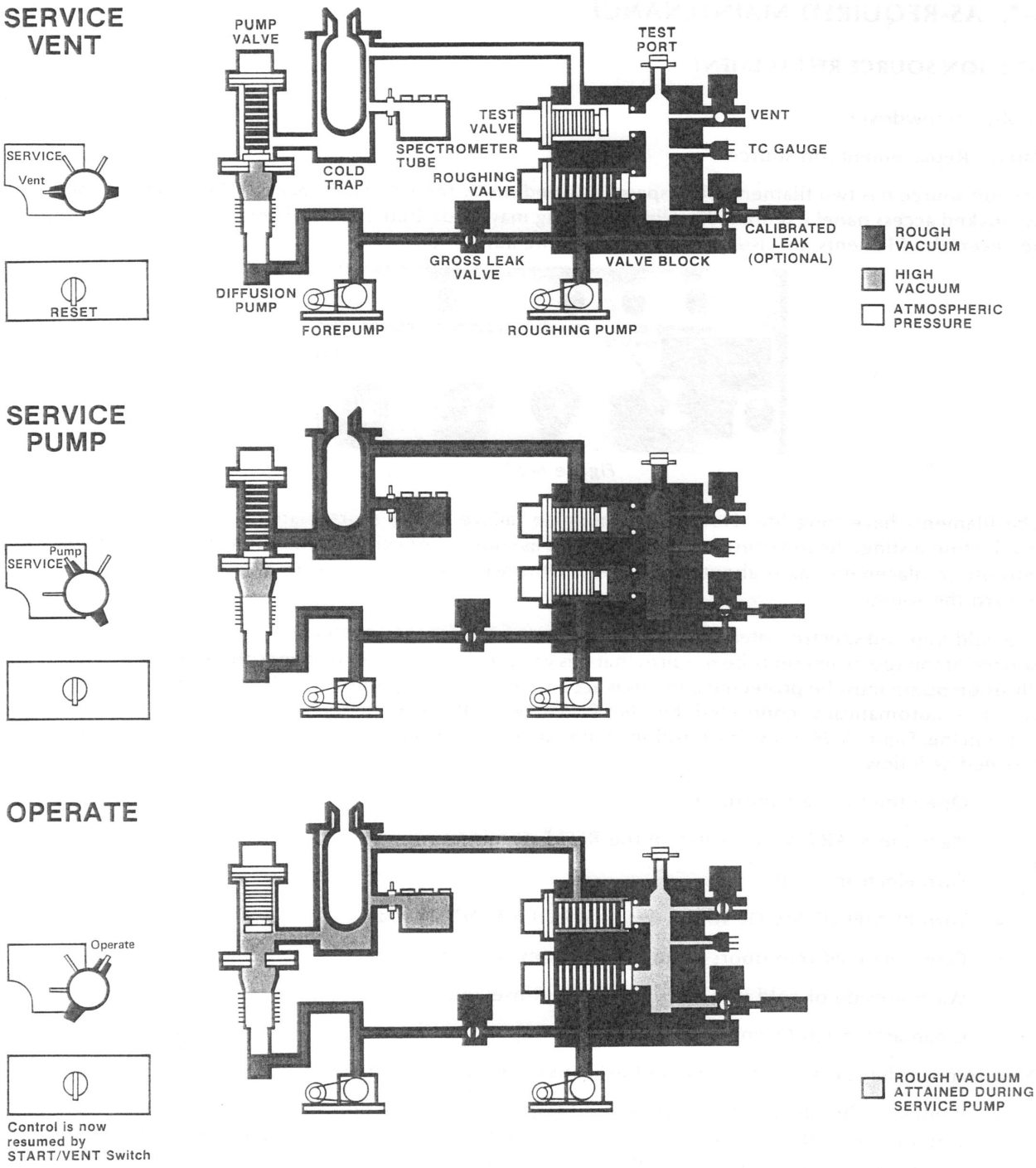

Figure 6-26. *Service and Operate Modes, Showing Valve Positions.*

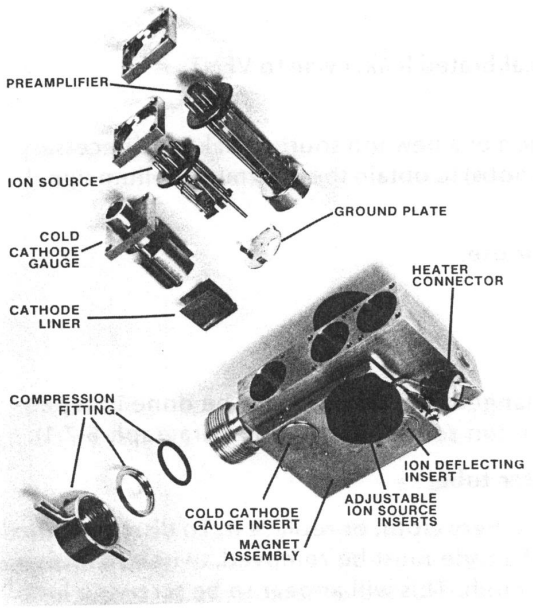

Figure 6-28. Spectrometer Tube (Exploded View)

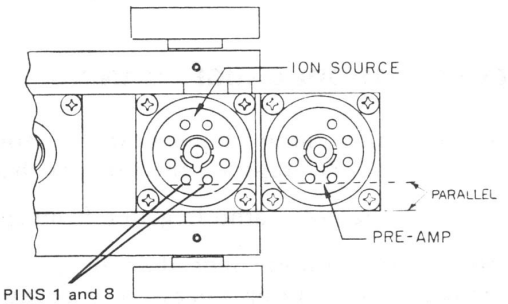

Figure 6-29.

9. Remove four screws and discard spent ion source.
10. Inspect ion source cavity to verify that it is clean. (If not, see paragraph 6-6.5.) If ground slit plate is not clean, carefully remove it with "shoe hook" or thin screwdriver. Replace it or clean it, using emery cloth.
11. When installing ground slit plate, be sure that snap prongs are facing up. Also align slit at 90° with sidewall of spectrometer tube and/or concentrically align circular hole in plate with smaller guide hole in bottom of ion source cavity.
12. Wipe the new O-ring and mating surfaces with clean lint-free cloth and place new ion source in cavity. Locating pin should be approximately in center of guide hole. Be sure that pins 1 and 8 are parallel to the sidewall of the spectrometer tube (Figure 6-29). Tighten hold-down flange evenly and firmly.
13. Install spectrometer tube in leak detector. It is recommended that the compression fitting be dismantled so that the O-ring and mating surfaces may be wiped to assure a good seal. Plug in heater and the three plugs at the top of the tube.
14. Turn the PUMPING MODE switch to the SERVICE PUMP position.
15. When test port pressure reaches 20 millitorr, turn on electronics and verify that the SPECTROMETER TUBE PRESSURE meter reads upscale.
16. Turn PUMPING MODE switch to the OPERATE position, and place the START/VENT switch in the START position.
17. As the spectrometer tube pressure reaches 0.5 millitorr, pour a little liquid nitrogen into the cold trap. When the pressure reaches the green band, fill the trap and turn on the filament.
18. Open calibrated leak.

NOTE

If the leak detector does not have built-in calibrated leak, cycle to VENT and install calibrated leak in test port.

19. Since tuning usually changes slightly after installation of a new ion source, make the necessary adjustments (especially to the large black magnet knobs) to obtain the maximum helium signal. (See paragraph 4-4.)

20. Replace side panel. Leak detector is now ready for use.

6-7.2 COLD CATHODE GAUGE CLEANING

1. Usually this is done whenever the ion source is changed, but if it needs to be done independently, the first steps are the same as those for the ion source (steps 1-8), paragraph 6-7.1).

2. Remove the cold cathode gauge from spectrometer tube.

3. Slip out the cathode liner. If it is dirty, clean it with emery cloth, or replace it. To dismantle the gauge, which is rarely necessary, see Figure 6-30. If anode must be removed, twist it **to loosen** while pulling to prevent cracking ceramic feedthrough. This will **appear** to be screwing loop onto pin.

4. Any other necessary spectrometer tube service should be done now.

5. Install the cold cathode gauge, preferably using a new O-ring. Wipe the O-ring and mating surface with clean lint-free cloth.

6. Follow steps 13 through 20 of paragraph 6-7.1 to restart leak detector.

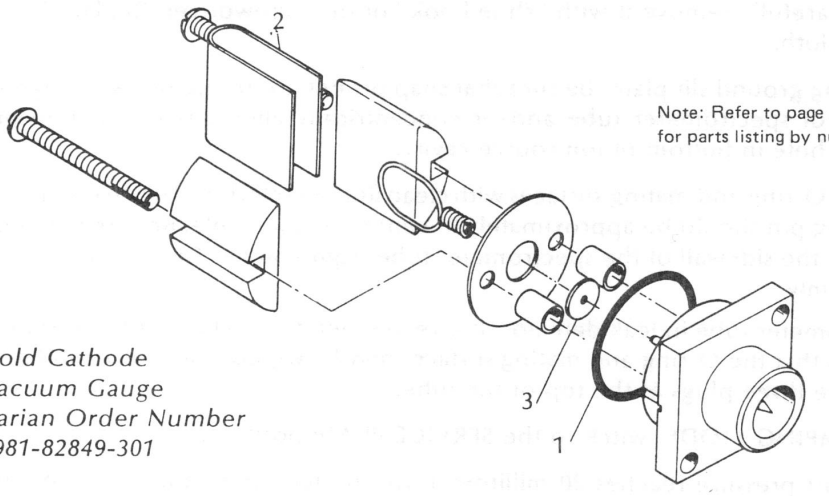

Note: Refer to page 8-13 for parts listing by number.

Figure 6-30. Cold Cathode Vacuum Gauge Varian Order Number 0981-82849-301

6-7.3 SPECTROMETER TUBE CLEANING

Normally this is done as part of the complete overhaul but if it is required at any other time, proceed as follows:

6-7.3.1 Removal

Follow steps 1-8 in paragraph 6-7.1.

6-7.3.2 Disassembly and Cleaning

Follow steps 2-11 in paragraph 6-6.5.

6-7.3.3 Installation

1. Install spectrometer tube in Leak Detector, cleaning the O-ring of the compression seal. Connect heater, high voltage lead, ion source and preamplifier.
2. Turn the PUMPING MODE switch to SERVICE PUMP. When the TEST PORT PRESSURE is 20 millitorr or less, turn on the ELECTRONICS circuit breaker and verify that the SPECTROMETER TUBE PRESSURE meter indicates upscale.
3. Turn the PUMPING MODE switch to OPERATE, fill the trap, and proceed to check the sensitivity as in paragraph 4-4.

6-7.4 DIFFUSION PUMP CLEANING

The air-cooled HSA-150 diffusion pump keeps the spectrometer tube pressure generally below 0.01 millitorr.

Santovac 5 is recommended. Silicone fluids, though generally excellent, must not be used because they deposit insulating films on the ion source after a few weeks, with consequent loss of sensitivity. The charge is 65 cc. Normally it takes 12 to 18 months to deplete the charge to a minimum level; symptoms are fluctuating sensitivity and spectrometer tube pressure.

Cleaning is seldom required because the HSA-150 purges itself of contaminants by fractionation. Inability to maintain low green-band operation (despite absence of vacuum system leaks) and/or increased sensitivity, together with instability, are indications of contaminated fluid.

Whenever the pump is to be recharged with oil, it should be thoroughly cleaned. Proceed as follows:

1. Turn off the rough pump, diffusion pump, electronics and filament switch. Place START/VENT switch in RESET position.
2. Turn the PUMPING MODE switch to the SERVICE VENT position.
3. Remove, clean and replace cold trap (Paragraph 6-3.1).
4. Remove the left side panel.
5. Unplug the diffusion pump heater from the junction box near the bottom of the pump (Figure 6-31).
6. When the diffusion pump has been off for 20 minutes, turn off the fore pump.
7. Loosen the lower hose clamp on the Tygon tubing at the foreline.
8. Remove the three Phillips head screws securing the diffusion pump inlet flange to the pump valve, and move the pump to a work area. Do not lose the spring on top of the jet.
9. Clean and recharge the diffusion pump as follows:
   a. Remove the spring and carefully lift out the jet assembly (Figure 6-32).Wipe excess oil from jet.
   b. Pour out and discard used pump fluid, while pump is warm. Rinse out pump with TCE (heated by plugging in pump for 5 minutes). Then rinse with methanol and dry.
   c. Dismantle jet assembly and clean as above.
   d. Using fine abrasive paper, remove any baked-on deposits of carbon from the jet parts.
   e. Rinse all parts as above.
   f. Reassemble jet.
   g. Fill with 65cc of Santovac 5.

NOTE

An alternative to the TCE-methanol procedure is methanol, followed by acetone (to remove any hydrocarbons not removed by methanol). Then rinse with methanol and dry.

10. Install the jet assembly, being sure that two of the five guide protrusions straddle the foreline opening, and that the jet assembly is seated as far down as shown in Figure 6-33.
11. Replace diffusion pump in cabinet, being careful to locate the spring on top of the jet assembly and the O-ring on the flange.
12. Replace and tighten (evenly) the three Phillips screws.
13. Replace Tygon tubing on foreline and tighten the hose clamp.
14. Plug in diffusion pump heater.
15. Turn the PUMPING MODE switch to the SERVICE PUMP position.
16. Turn on roughing pump, forepump and diffusion pump.
17. Allow 30 minutes for the diffusion pump to warm up, then turn on ELECTRONICS circuit breaker. Verify that the SPECTROMETER TUBE PRESSURE meter reads upscale, then turn the PUMPING MODE switch to OPERATE.
18. When the SPECTROMETER TUBE PRESSURE meter shows 0.5 millitorr, pour a little liquid nitrogen in the cold trap. When the pressure is in the green band, fill the trap.
19. Turn on the filament, place the START/VENT switch in START, and when the TEST lamp lights, leak-check the diffusion pump inlet flange and foreline tubing.
20. Replace side and front panels, check the leak detector's sensitivity (paragraph 4-4) and return it to use.

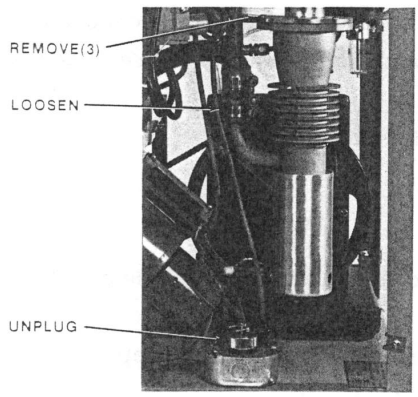

Figure 6-31. Removing Diffusion Pump

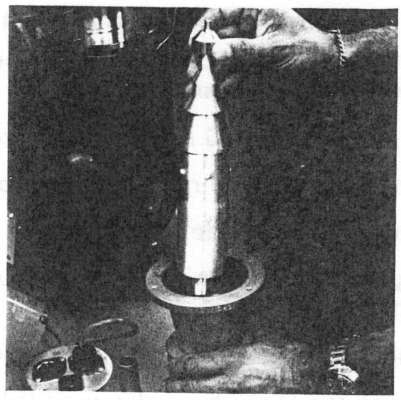

Figure 6-32. Lift Jet Assembly Out of Diffusion Pump

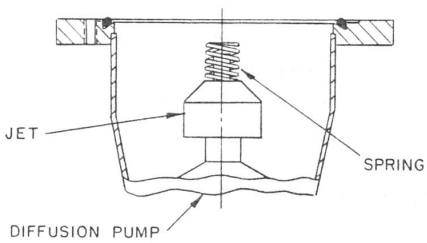

Figure 6-33. Position of Jet Top When Jet is Firmly Seated

Note: Refer to page 8-16 for parts listing by number.

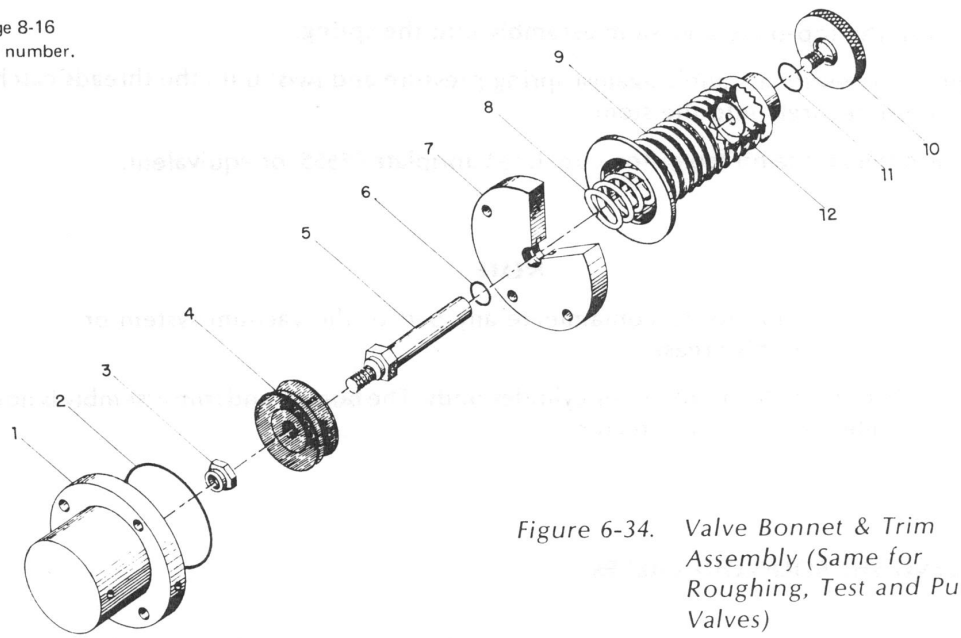

Figure 6-34. Valve Bonnet & Trim Assembly (Same for Roughing, Test and Pump Valves)

6-7.5 SERVICING THE BELLOWS-SEALED VALVES

Occasionally the valves will need cleaning. Also, after many thousands of operations, if a bellows develops a leak, it must be replaced. Directions for disassembly are given below. Figure 6-34 is an exploded view of the bonnet and trim assembly of the roughing, test, and pump valves. The bonnet and trim assemblies will usually have been removed as part of the complete overhaul: paragraph 6-6.6 (pump valve) or 6-6.7 (valve block assembly). If the complete overhaul is not being carried out at this time, the bonnet and trim assemblies can be removed, by carrying out the complete shutdown procedure in paragraph 4-6.4, then disconnecting the main power line and relieving the compressed air pressure. Once the assembly has been removed, and the "top hat" (1) removed, proceed as follows:

1. Place a wrench on the hex between the rubber piston cup and the top plate. Grasping the knurled seal disc (10) by hand, unscrew it.
2. Remove the bellows (9), washer (12), and spring (8).
3. Withdraw the stem (5) with the piston cup (4) attached.
4. Remove the quad ring (6) from the bore of the top plate (7) and the O-ring (11) from the back of the seal disc.
5. Clean all parts thoroughly, especially the groove in the bore of the top plate.
6. Install new quad ring, rolling it carefully into the groove. Be sure it is not twisted. Install new O-ring in the seal disc.
7. Place a light film of grease (see step 11 below) on the stem and push it carefully through the top plate **from the flat side.** Put a little more grease on the stem where it was wiped off.
8. Place the seal disc on a table with the threaded stud up. Set the bellows over it. Drop the washer in place over the threads of the seal disc; follow with the spring.

9. Now place the top-plate-and-stem assembly into the spring.
10. Compress the entire assembly against spring pressure and twist until the threads catch. Screw the seal disc securely into the stem.
11. Replenish the grease on the piston cup. Use Lubriplate 55555, or equivalent.

NOTE

Be very careful not to contaminate any part of the vacuum system or O-rings with this grease.

12. Using a new O-ring (2), install the air cylinder body. The bonnet and trim assembly is now ready to be reinstalled in the leak detector.

6-7.6 SERVICING THE SOLENOID VALVES

The vent and gross leak valves are solenoid operated. They are replaceable as complete units.

To clean the seat of the valve, it is necessary to have the valve out of the machine. The vent valve can be removed safely any time the test port is vented. To remove the gross leak valve, follow the procedure of paragraph 4-6.4 for complete shutdown.

1. With the valve on a bench, remove the solenoid coil by prying off the red cap.
2. Unscrew the actuator seal ring with a spanner in the two slots.
3. Carefully lift off the actuator, observing the order of assembly of the armature and spring, and the **direction** of assembly of each. They **must** be reassembled in the same order and direction.
4. Inspect the metal and rubber components of the poppet seal carefully. If they are not damaged, clean them.
5. Clean and lubricate the O-ring which seals the actuator seal ring and place it in the valve body.
6. Reassemble the valve, tightening the actuator seal ring securely with a spanner.
7. Clean and lubricate the O-rings and/or rubber ferrules sealing the valve to the leak detector and install the valves.

6-8 ELECTRONIC SYSTEM

The electronic system is fully solid-state. It does not require preventive maintenance. Owing to a thorough 5-day operating check before shipment, component failure is rare and reliability is high.

6-8.1 UNITS AND MODULES

To simplify location and correction of any malfunction that might occur, the complete electronic

system is divided into seven physically separate units, each with a block number for component part identification, as follows:

1.	Power Supply and Emission Regulator Board	100-199
2.	Amplifier and Set Point Board	200-299
3.	Leak Indicator (includes audible alarm, if present)	300-399
4.	High Voltage Power Supply	500-599
5.	Subchassis, front panel, etc.	600-699
6.	Valve Block Assembly	700-799
7.	Spectrometer Tube	800-899

The system schematics are at the end of the manual and components within the units are numbered to correspond with the blocks above. For example, S603 is a switch on the control panel.

Electrical connectors are also numbered according to this system. The first digit of the connector number indicates the unit on which the connector is located, and the third digit indicates the unit to which that cable is connected. The second digit is used when there is more than one cable (or connector) with the same location and destination. For example, the connectors P/J 106, P/J 116 and P/J 126 are all located on the Power Supply and Emission Regulator board; all the wires from these connectors go to the Subchassis or Front Panel.

6-8.2 CIRCUITS

For descriptive purposes, it is easier to divide the electronics system into eight circuits:

Spectrometer tube
Electrometer amplifier
Filament protection
Spectrometer power supply
Emission regulator
Audible alarm (optional)
Indicator lamps
Thermocouple gauge

These are described in detail in the following paragraphs.

6-8.3 SPECTROMETER TUBE

As described in detail in Section II, this is the heart of the system. All external circuits either contribute to its operation or gather information from it. From the electronic viewpoint, there are three essential assemblies served by the external circuits:

1. The cold cathode gauge, which measures the total pressure within the spectrometer tube.
2. The ion source, which ionizes the gas molecules and shapes and directs the ion beam into the magnetic field. (The magnetic field then separates the helium ions from other ions in the ion beam and directs them to the collector.)
3. The preamplifier assembly, which collects and amplifies the small helium ion current so that it may be sent through the interconnect cable without being affected by external influences. This unit requires special care in handling because its ultra-high sensitivity makes it susceptible to damage from static discharges.

6-8.4 ELECTROMETER AMPLIFIER

The signal from the preamplifier in the spectrometer tube is amplified by a meter amplifier (A204). The feedback resistance of this amplifier is selected by the Range Select switch (S321). The gain of the amplifier is controlled by the CALIBRATE adjustment on the control panel.

6-8.5 FILAMENT PROTECTION

In normal operation (PUMP MODE switch in OPERATE), the cold cathode gauge senses the spectrometer tube pressure and shuts off the filaments when pressure is above 0.2 millitorr.

Further, if current ever stops flowing in the diffusion pump heater (foreline pressure switch or vane switch opens or heater burns out) the current sensing relay K613 will drop out, simultaneously lighting the DP OFF lamp and shutting off the filament.

In the service modes the filament is shut off by contacts of the PUMPING MODE switch.

If the filament ON, AUTO-RESET, OFF switch is in the ON position, the filament will shut off in any of the events described above. To turn it back on, move the switch to the AUTO RESET position. If conditions have been restored to normal, the filament will light and the switch can then be returned to the ON position.

If the switch is in AUTO RESET position when the filaments are shut off as described above, the filament will automatically turn back on when conditions are restored to normal.

If the filament mode switch is in the OFF position the filament will remain off under all conditions.

NOTE

Restoration of filament power and emission does **not** restore the leak detector to TEST mode; this requires resetting the START/VENT switch **after** emission is restored.

6-8.6 SPECTROMETER TUBE POWER SUPPLY

The several electrode voltages in the ion source are furnished by a regulated power supply, appropriately tapped and with fine control applied by the ION voltage, REPELLER voltage, and FOCUS voltage adjustments on the control panel.

The power supply for the solid state preamplifier is a separate dual 15-volt supply located in the lower cabinet adjacent to the spectrometer tube.

The power supply which furnishes the 2,000 volt power to the cold cathode gauge is located in the subchassis. It is a filtered supply and the current drawn from it is displayed on the TEST PORT PRESSURE meter, calibrated in units of pressure.

6-8.7 EMISSION REGULATOR

The emission regulator uses negative feedback to control the firing of a triac (CR601, located on the Power Control subchassis) to furnish power to the filaments.

Flow of electrons from the filament to the ion chamber (emission) can be controlled from 0.1 milliamperes (mA) to 2 mA, and is displayed on the EMISSION meter on the control panel. If the emission drops below 0.1 mA, relay K101 drops out. In this event the TEST lamp is precluded from lighting, and the LEAK RATE meter is not operative.

6-8.8 AUDIBLE ALARM (OPTIONAL)

The audible alarm circuit is located in the Leak Indicator module. This is a voltage-to-frequency converter. Its voltage-sensing threshold as well as its volume is adjustable from the Leak Indicator front panel.

6-8.9 INDICATOR LAMPS

The TEST lamp (green) indicates that (1) the test valve is commanded open, and (2) the filament is emitting electrons. If lighted together with the (red) GROSS LEAK lamp, it indicates that (1) the gross leak valve is commanded open, and (2) that the filament is emitting electrons.

NOTE:

Valid testing is impossible when the TEST lamp is off.

The GROSS LEAK lamp indicates that rough pumping is in progress and the selected transfer pressure has not been reached. If the GROSS LEAK and REJECT lamps are lighted together, the test port pressure is, above a safe level for automatic gross leak testing. This pressure is preset at the factory at approximately 700 millitorr. If the GROSS LEAK and TEST lamps are lighted together, the test port pressure is below the preset 700 millitorr, but above the selected transfer pressure. The gross leak valve is open, and testing can be carried out. The GROSS LEAK lamp is a reminder that the leak detector is operating at lower sensitivity than that of the standard test mode, so it can indicate larger leaks. (If measurement of leak size is necessary in the GROSS LEAK mode, the leak detector must be calibrated in this mode.)

6-8.10 THERMOCOUPLE GAUGE

The thermocouple gauge senses the test port pressure. Its associated circuitry performs three functions: First, it indicates the pressure on the TEST PORT PRESSURE meter on the control panel. Second, it controls the opening of the gross leak valve (if the GROSS LEAK switch is on). Third, it controls the opening of the test valve (and the simultaneous lighting of the TEST lamp if the filament is on). The thermocouple gauge is powered by the 24-volt control transformer, so pressure is indicated whenever the machine is connected to line power.

6-9 ELECTRICAL AND ELECTRONIC ADJUSTMENTS

6-9.1 ION SOURCE VOLTAGES

General: It is sometimes important to know if the ion source tuning voltages have sufficient span or are in the correct range. A simple procedure and comparison with this table will yield the answers.

1. Set the ION, REPELLER and FOCUS VOLTAGE knobs fully counterclockwise (CCW).
2. Measure each T.P. in numerical order, leaving the control in its CW position before proceeding with next measurement. All measurements are positive with respect to ground (TP 4 on front panel). Use a meter with at least 100,000 ohms/volt impedance.

TP1	Ion	CCW = 160 Volts CW= 330 Volts	All Voltages ±10%
TP2	Repeller	CCW = 330 Volts CW = 430 Volts	
TP3	Focus	CCW = 310 Volts CW = 250 Volts	

6-9.2 ADJUSTING THE THERMOCOUPLE GAUGE CIRCUITS

General: This procedure should be followed if a new 531 thermocouple gauge is installed, or if either the Gross Leak transfer point or the Test transfer point are found to have drifted. The leak detector should be operating with the diffusion pump and electronics on and the thermocouple gauge connected.

1. Open the top door to gain access to the P-C cards.
2. With the PUMPING MODE switch in OPERATE, the GROSS LEAK switch OFF and the TRANSFER PRESSURE set at HOLD, place the START/VENT switch in START. When the machine is pumped down as far as it will go, adjust R110 until the TEST POSRT PRESSURE meter reads 5 millitorr. R110 is on the larger (Power Supply and Emission Regulator) P-C board and is accessible through a hole in the lower left quadrant of the smaller board.
3. Now set the TRANSFER PRESSURE knob at 10 millitorr. Adjust R237 until transfer takes place.
4. Adjust R110 as necessary to make the TEST PORT PRESSURE meter indicate zero. Cycle the START/VENT switch several times and make further adjustment to R237 as necessary to assure that transfer takes place at 10 millitorr.
5. Set TRANSFER PRESSURE knob to HOLD. If TEST lamp stays on, readjust R237 slightly counterclockwise until TEST lamp goes off.
6. Locate A203 on the smaller P-C card. Short together pins 4 and 5 of A203, and adjust R230 until relay K202 actuates. Swing R230 back and forth between relay "in" and "out," and leave it set half-way between. Remove the short between pins 4 and 5.
7. Turn R224 fully clockwise. Turn on the GROSS LEAK switch and turn off the filament.
8. Move the START/VENT switch to VENT; then to START. The GROSS LEAK and REJECT lamps will be lighted.
9. Adjust R224 so that the REJECT lamp goes out as the TEST PORT PRESSURE meter indicates 700 (+100) millitorr. This adjustment is easiest if a Tuning Leak or other easily adjusted bleed valve is installed in the test port, and adjusted to yield a test port pressure of 700 (+100) millitorr.
10. This adjustment completes the procedure. Turn on the filaments, close the upper door, check the sensitivity and proceed with use of the leak detector.

6-9.3 OVERPRESSURE PROTECTION ADJUSTMENT

Parts: 12 Megohm Resistor, 1/8 watt (min.)

1. Turn off the ELECTRONICS circuit breaker.
2. Remove the right-hand side panel.
3. Remove high voltage lead from the spectrometer tube and connect a 10-megohm resistor from it to ground (TP4).
4. Keeping away from the exposed high voltage, turn on the electronics. The SPECTROMETER TUBE PRESSURE meter should be reading about 0.25 millitorr (just above green band).
5. Open the upper door, exposing the P-C cards.
6. Locate and adjust R209 (lower center of smaller P-C card) just until relay K201 drops out and the filaments turn off. This is the correct setting. Make small adjustments and wait 5 seconds.

7. Turn off the electronics, close the upper door, replace the high voltage lead on the spectrometer tube, replace the side panel, turn on the electronics and proceed to check sensitivity and use the leak detector.

6-9.4 METER AMPLIFIER INSTALLATION AND ADJUSTMENT

The meter amplifier (A204) is a low-offset operational amplifier of good reliability. If it needs rezeroing, turn off ELECTRONICS and start at step 5. If it needs replacement:

1. Turn off the ELECTRONICS circuit breaker.
2. Open upper door to expose P-C cards.
3. Remove A204 (upper right corner of smaller P-C card).
4. Cut leads of new 540J to 3/8" length and plug it in, noting the orientation guide shown in the etch and on the socket.
5. Set Range Selector switch fully counter clockwise, and CALIBRATE knob fully clockwise.
6. Unplug connector P/J208 and place clip-lead or other short across pins 2 and 8 (on P-C card), shorting the inputs of A204.
7. Turn on ELECTRONICS circuit breaker. Cycle the START/VENT switch to RESET and START.
8. When the TEST lamp lights, adjust R231 to bring the LEAK RATE meter reading as close as possible to zero.
9. Turn off the ELECTRONICS circuit breaker. Remove the clip-lead and reconnect P/J208. Close the upper door.
10. Turn on the ELECTRONICS and cycle the leak detector to TEST.
11. Set ZERO knob on Leak Indicator Panel approximately 5 turns from either end.
12. Re-zero LEAK RATE meter, using COARSE ZERO knob on Control Panel. Pointer on this knob should now lie between "9 o'clock" and "3 o'clock." If it does not, readjust R231.

6-9.5 ADJUSTMENT OF SPAN CONTROL

General: This adjustment should need attention only if components on the audible alarm P-C card are replaced. This card is part of the optional audible alarm and is located in the Leak Indicator chassis.

1. Open upper door, disconnect P/J603 at the back of the Leak Indicator chassis.
2. Lift the chassis out, invert it and remove the four screws securing the cover. Remove the cover.
3. Replace the chassis on the leak detector and reconnect P/J603.
4. Cycle the leak detector to test, with TEST lamp lighted. Obtain a full-scale deflection of the LEAK RATE meter. (Use ZERO knob on Leak Indicator Panel, with range selector on most sensitive scale.)
5. Turn the THRESHOLD knob fully counterclockwise and VOLUME fully clockwise. Adjust R303 (span control) on the PC board until sound disappears, then reverse direction 1/8 turn to restore sound at highest possible pitch.
6. Retracing steps 3, 2 and 1, replace the Leak Indicator cover and place the leak detector back in service.

6-9.6 FORELINE PRESSURE SWITCH ADJUSTMENT

1. Turn off the DIFFUSION PUMP and ROUGH PUMP circuit breakers and turn the PUMPING MODE switch to SERVICE PUMP.
2. Unplug the cable from the 531 thermocouple gauge at the valve block and reroute it to the 531 thermocouple gauge at the foreline.
3. Remove the cover of the foreline pressure switch.
4. Unplug the pressure switch cord from the junction box and hook up an ohmmeter or circuit-tracing lamp to the two outer blades of the plug.
5. When the diffusion pump has been off for 20 minutes, and with test port open, turn off the FOREPUMP circuit breaker. Vent the diffusion pump by turning PUMPING MODE switch from SERVICE PUMP to OPERATE twice.
6. The pressure switch should read open — infinite ohms. If not, back out the screw (1/4" wrench) until it does.
7. With PUMPING MODE switch in SERVICE PUMP, turn on the FOREPUMP circuit breaker. The switch should actuate when the TEST PORT PRESSURE meter needle has moved 1/16" ±1/32". from "ATM." If it actuates too soon, back the screw out; if it fails to actuate, advance the screw (away from the switch).
8. Repeat steps 5 and 7 until the correct setting is achieved. Make sure that the forepump achieves a good vacuum (around 20 millitorr or better).
9. Replace cover on foreline pressure switch and plug in its cord.
10. Turn on DIFFUSION PUMP and ROUGH PUMP circuit breakers.
11. Reroute thermocouple gauge cable back to the thermocouple gauge on the valve block.
12. When the diffusion pump has been on for 30 minutes, turn the PUMPING MODE switch to OPERATE and proceed to use the leak detector.

6-9.7 ADJUSTMENT OF PRESSURE LIMIT SWITCH SETTINGS ON OPTIONAL AIR COMPRESSOR

1. Turn pressure regulator fully clockwise to highest pressure setting.
2. SLOWLY release air through escape valve at bottom of filter bowl until compressor starts (turns counterclockwise as viewed from above, through filter bowl). Note turn-on and shut-off pressures. If these are not 70 psi and 90 psi respectively, adjust limit switches per instructions inside plastic cover of air compressor pressure switch.
3. Reset regulator to 70 psi.

6-10 LEAK CHECKING THE LEAK DETECTOR

Accuracy, reliability and stability of any mass spectrometer leak detector depends upon the leak-free integrity of its own vacuum system. Inherent helium background and its effect on sensitivity demands elimination of all detectable leaks. If performance degrades during operation or after some part of the vacuum system is opened, a methodical leak check will eliminate the possibility of a leak as the cause. Proceed as follows:

6-10.1 DETERMINE PROCEDURE BY LEAK SIZE

Classifying leaks by size determines which procedure will locate leaks most reliably in the shortest time. When using the 936 series leak detector, these classes are determined by TEST PORT pressure ranges as follows:

a. Above 700 millitorr (gross leak transfer point).

b. Between 700 millitorr and TRANSFER PRESSURE set point.

c. Below TRANSFER PRESSURE set point (normal TEST mode).

These procedures are given in paragraphs 6-10.3, 6-10.4 and 6-10.5.

6-10.2 GENERAL SUGGESTIONS

The following suggestions apply whether leak checking components, systems, or the leak detector itself.

1. When spraying suspected leak locations, always apply helium starting at the highest points first, since helium rises. If drafts, such as from a cooling blower, exist in the area, apply helium downstream from source first, or deflect draft until leak checks are completed.

2. If vent grooves exist at flanges or other assembled seals, apply helium to these points, (rather than a general spray), to obtain the most positive response, minimize use of helium and save time in checking.

3. Locate and repair large leaks (paragraphs 6-10.3 and 6-10.4) before attempting to locate extremely small leaks.

4. Limit the search to a general area of test piece by isolation methods. Bagging, masking or shielding with tape, plastic film or duct seal (if applied properly) will shorten the time required to locate both large and small leaks.

5. Use only enough helium to reach the leaks. DON'T flood the area.

6-10.3 TEST PORT PRESSURE GREATER THAN 700 MILLITORR

Large leaks that prevent reduction of test port pressure meter readings below the 700 mT Gross Leak transfer point may be located by spraying with helium and listening for a rise in the frequency or tone of mechanical pump noise as helium enters the pump in large quantities.

6-10.4 TEST PORT PRESSURES BETWEEN 700 MILLITORR AND TRANSFER PRESSURE SET POINT

Leaks small enough to allow valve transfer into the GROSS LEAK test mode (less than 700mT) will allow testing at a sensitivity less than in the normal TEST mode, using procedures described in paragraph 6-10.2.

6-10.5 TEST PORT PRESSURES LESS THAN TRANSFER PRESSURE SET POINT

Checking for leaks in the normal TEST mode allows location at full sensitivity. This emphasizes the need to follow paragraph 6-10.2 carefully to minimize false leak locations and the build-up of permeation through seal materials. Extended testing over a long period of time on parts or systems that have elastomer seals saturates these materials with helium, making accurate testing more difficult.

6-10.6 LEAK CHECKING THE 936-60 AND -65 LEAK DETECTORS

6-10.6.1

With the leak detector in TEST mode, spray the following seals or joints in numerical order:

1. Test port and manifold to valve block.
2. Test valve, vent valve, T/C gauge tube, built-in calibrated leak valve (with valve open and closed) and valve block bottom cover plate.
3. Valve block to cold trap manifold.
4. Cold trap reservoir flange and all spectrometer tube seals.
5. Pump valve flange and diffusion pump inlet flange.
6. Foreline connections at diffusion pump, forepump, foreline pressure switch, T/C gauge tube and gross leak valve.

NOTE

It may be necessary to deflect airstream from diffusion pump blower when checking in above steps.

6-10.6.2

The following components can be checked only with the gross leak valve opened by turning the GROSS LEAK switch ON and setting TRANSFER PRESSURE Knob to the HOLD position:

1. Roughing valve.
2. Rough pump connections at valve block and pump.
3. Roughing side of gross leak valve.
4. Rectangular connection of built-in calibrated leak valve.

6-10.6.3

Leakage through Gross Leak valve can be checked only as follows:

1. Turn ROUGH PUMP circuit breaker OFF.
2. Disconnect roughing flange at bottom of valve block.
3. Insert helium into valve block opening.

SECTION VI. MAINTENANCE
936-70

6-1 INTRODUCTION

Like other quality test equipment, a mass spectrometer leak detector requires periodic maintenance to insure continued reliable operation. For simplicity, in this section, the maintenance functions are grouped by recommended frequency as shown in Table 6-1 below, based on assumed everyday use. This table also serves as an index.

Most of these functions are self-explanatory. All of them can be carried out at routine intervals, as indicated. The sensitivity should always be checked at least once a day. However, other functions may be carried out either more or less often than shown, depending upon the extent of use of the leak detector.

Some maintenance functions may be required on a demand basis — for example, changing an ion source after filament failure. These are listed in Table 6-2. (They are also included in the complete overhaul.)

The fully solid-state electronic system does not require preventive maintenance. Owing to a thorough 5-day operating check before shipment, component failure is rare and reliability is high. To simplify location and correction of any malfunction that might occur, the complete electronic system is divided into eight physically separate units, each described in Paragraph 6-8.

Paragraph 6-9 describes electrical adjustments and paragraph 6-10 tells how to check the leak detector itself for possible leaks.

NOTE

When servicing the leak detector or any vacuum equipment, cleanliness is vital. There are some techniques more important in leak detector servicing than in general vacuum work. They are:

1. Do not use silicone oil or silicone grease. (Although these products are generally excellent for vacuum systems, they cause loss of sensitivity in mass spectrometer leak detectors through build-up of invisible insulating layers in the spectrometer tube.)
2. Wipe all O-rings clean before installation to insure that no foreign matter is present to impair the seal. Normally it is unnecessary to use vacuum grease. (If vacuum grease or diffusion pump oil is used, avoid silicone types, use sparingly and wipe the O-rings "shiny" dry.) Apiezon L (Varian order number 5000-6954-00-004) is excellent.

See Section VII for troubleshooting hints.

TABLE 6-1
SCHEDULED MAINTENANCE

Paragraph	Description	Daily	Weekly	6 Mos.	12 Mos.
6-2.1	Check sensitivity	X			
6-3.1	Check mechanical pump drive belt.		X		
6-3.2	Check oil level in mechanical pump.		X		
6-3.3	Check air filter.		X		
6-3.4	Check compressed air filter and lubricator.		X		
6-4.1	Change roughing pump oil.			X	
6-4.2	Change forepump oil			X	
6-4.3	Oil blower motor			X	
6-5.1	Oil mechanical pump motors				X
6-5.2	Change mechanical pump belts				X
6-6	Complete overhaul, including: Foreline Manifold Diffusion Pump Spectrometer Tube Valve Block Assembly Mechanical Pumps				X

TABLE 6-2
AS-REQUIRED MAINTENANCE

Paragraph	Function	Most Common Symptom
6-7.1	Ion Source Replacement	filament failure (whenever convenient after second filament is in use)
6-7.2	Cold Cathode Gauge Cleaning	instability in spectrometer tube pressure (also whenever ion source is replaced)
6-7.3	Spectrometer Tube Cleaning	instability in leak rate reading and loss of sensitivity
6-7.4 & 6-7.5	Vacuum System and Valves	instability in leak rate reading

OTHER MAINTENANCE INFORMATION

Paragraph	Description
6-8	Electronic System (description)
6-9	Electrical and Electronic Adjustments
6-10	Leak Checking the Leak Detector

6-2 DAILY

6-2.1 SENSITIVITY CHECK

1. Perform sensitivity check as described in paragraph 4-4.
2. If specification still cannot be met, refer to Troubleshooting, Section VII.

6-3 WEEKLY

6-3.1 DRIVE BELTS

Check for proper tension. (You should be able to depress them about one inch.) If worn, check pulley alignment. Normally, belts need replacement only after many months of operation. (If replacement is necessary, see paragraph 6-5.2 for details.)

6-3.2 OIL LEVEL

Check sight glasses. If the level is low, add Welch Duo-Seal pump oil until the level is between the marks in the sight glass, when running.

6-3.3 AIR FILTER

Tools: Screwdriver

Parts: Standard furnace air filter 10" x 20" x 1"

Replace or reverse air filter if inspection shows large amount of accumulated dirt on filter or if diffusion pump shuts off due to lack of air flow. Replace filter at regular intervals. If necessary, dust can be removed by tapping or blowing gently with compressed air.

1. Remove rear panel.
2. Remove filter and reinstall so that clean end of filter is on the fan side (Figure 6-3).
3. Replace rear panel. NOTE: DO NOT OPERATE WITHOUT FILTER!

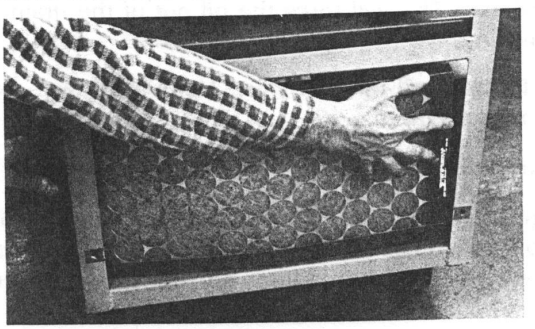

Figure 6-3.

6-3.4 AIR LINE FILTER AND LUBRICATOR

Tools: Screwdriver

Parts: Welch Vacuum Pump Oil or good grade of 20W non-detergent oil.

1. Remove front and right panels.
2. Empty filter bowl if water or sediment is present. (Valve on bottom is turned counterclockwise as viewed through the bowl.)
3. Verify that line air pressure is above 70 psig. If built-in compressor is used, verify that it turns on at 70 psig if pressure is bled to that level (through valve on bowl). See Section 6-9.7 if adjustments are necessary.
4. Fill the lubricator with Welch pump oil or equivalent.
5. Turn the needle valve (using screwdriver) fully clockwise, then slightly counterclockwise not more than 1/8 turn.

CAUTION

The transparent, unbreakable polycarbonate bowl and other plastic parts should be cleaned with pure soap and water only. Detergents and other cleaning liquids should not be used.

6.4 SEMI-ANNUAL

6-4.1 ROUGH PUMP OIL CHANGE

Tools: Screwdriver, pliers, funnel, 3/8" rubber or plastic hose, drain pan

Parts: Welch pump oil, Varian ordering number 5027-6954-27-008 (one gallon)

Change the roughing pump oil every six months or if unable to pump below 20 millitorr. Proceed as follows:

1. Turn off rough pump and with test port open, move the START/VENT switch to START. This will vent the rough pump.
2. Disconnect roughing manifold at the valve block and slide off Tygon hose.
3. Disconnect red hose at pump outlet.
4. Plug inlet with a suitable stopper.
5. Turn on rough pump circuit breaker, and open vented exhaust valve.
6. Connect a small hose to the drain valve. Open drain valve and place palm of hand over the exhaust. This will force the oil out of the drain. Hold until oil stops flowing.
7. Remove plug and pour 1 cup of oil into the inlet. Hold hand over exhaust again until oil stops flowing. Repeat until oil runs clean.
8. Turn off pump and close drain valve.
9. Refill with proper charge of fresh oil (see Figure 6-4). The standard 5.6 cfm pump requires 2.3 quarts of Welch Pump oil. The optional 10.6 cfm pump requires 2.5 quarts of Welch Pump oil. Fill so that oil level is between the two lines on the sight glass when the pump is operating.
10. Reconnect outlet hose.
11. Reinstall roughing manifold.
12. Restart pump.

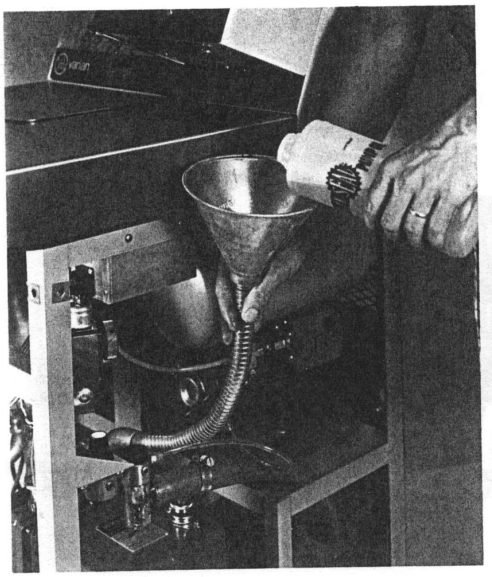

Figure 6-4.

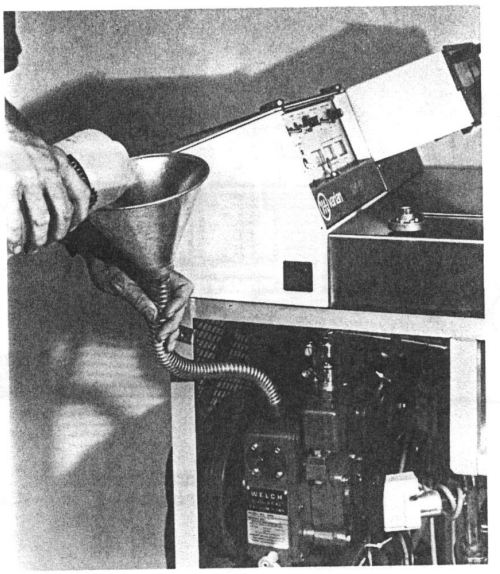

Figure 6-5.

6-4.2 FOREPUMP OIL CHANGE

Tools: Screwdriver, pliers, funnel, 3/8" rubber or plastic hose, drain pan

Parts: Welch pump oil, Varian ordering number 5027-6954-27-008 (one gallon)

Change the foreline pump oil every six months or if unable to pump below 50 millitorr with diffusion pump cold. Proceed as follows:

1. Plug the test port, then turn PUMPING MODE switch to the SERVICE PUMP position. (Figure 6-6 shows valve positions.)
2. Turn off diffusion pump.
3. Wait 20 minutes, then turn off forepump.
4. Loosen hose clamp on inlet and slowly slide hose off nozzle. This will vent the pump gradually.
5. Remove outlet fitting.
6. Plug inlet with a suitable stopper.
7. Turn on forepump circuit breaker.
8. Connect small hose to the drain valve. Open drain valve and place palm of hand over the exhaust hole. This will force the oil out of the drain. Hold until oil stops flowing.
9. Remove plug and pour 1 cup of Duo-Seal oil into the inlet. Hold hand over exhaust again until oil stops flowing. Repeat until oil runs clean.
10. Turn off pump and close off drain valve.
11. Refill with proper change of fresh Duo-Seal (0.6 quart). (See Figure 6-5). Fill so that oil level is between the two lines on the sight glass when pump is operating.
12. Replace outlet cap and inlet hose.
13. Start foreline pump and diffusion pump.
14. After 30 minutes, move the PUMPING MODE switch to the OPERATE position.

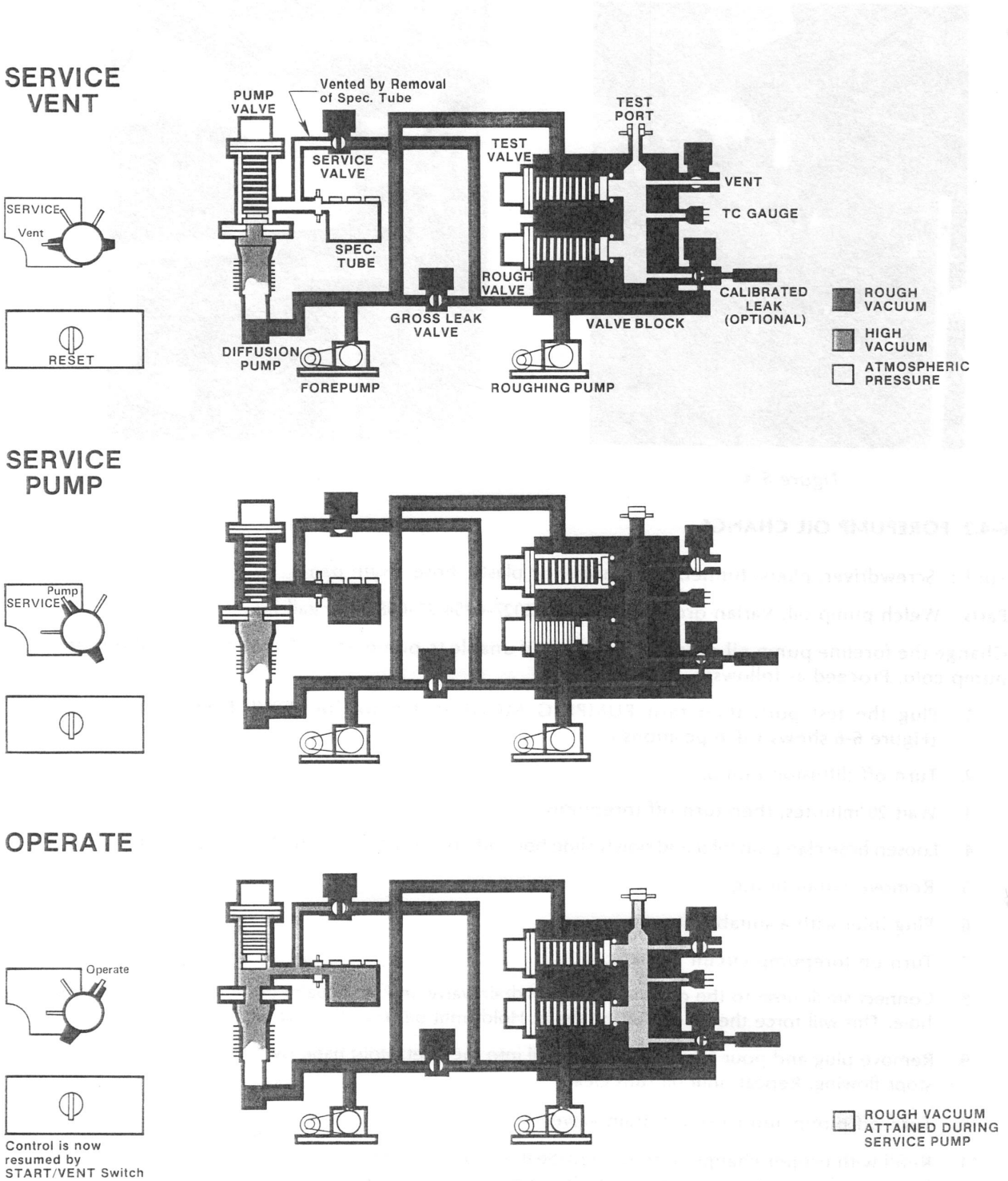

Figure 6-6. Service and Operate Modes, Showing Valve Positions.

6-4.3 OIL BLOWER MOTOR

Tools: Screwdriver

Parts: Electric motor lubricating oil.

1. Use a good grade of light electric motor lubricating oil.
2. Use two or three drops at each end of motor in holes provided.

6.5 ANNUAL

The items shown below should be done annually. See also paragraph 6-6 (Complete Overhaul) which is usually done annually but which may be done less or more often, depending upon usage.

6-5.1 OIL MECHANICAL VACUUM PUMP MOTORS

Tools: Screwdriver

Parts: Electric motor lubricating oil

1. Use a good grade of light electric motor lubricating oil.
2. Use two or three drops at each end of motor in holes provided.

6-5.2 MECHANICAL PUMPS, BELT CHANGE (FOREPUMP AND ROUGHING PUMPS)

Tools: Screwdriver, 1/2 inch box/open-end wrench.

Parts:

Pump Size	Belt Size	Varian Ordering No.
1400 B (0.9 CFM)	4L340	0981-6602 09 100
1402 B (5.6 CFM)	4L415	0981-6602 09 125
1376 B (10.6 CFM, Optional)	4L415	0981-6602 09 125

1. Shut off pump and replace belt with new one of proper size.
2. The tension should be just sufficient to drive the pump without visible slippage. About one inch of movement should be possible when pressing the belt.

6.6 COMPLETE OVERHAUL

6-6.1 GENERAL

After prolonged use, the leak detector will accumulate contaminants from even the "cleanest" of products tested. These contaminants will eventually impair operation. A thorough dismantling and cleaning of the vacuum system (including the spectrometer tube) will restore normal operation.

The following procedures, if done annually — for a leak detector in daily use, will prevent deterioration and sustain a high level of performance. For heavy production use, more frequent overhauls may be desirable; conversely, lighter use may permit a longer period between overhauls. In most cases this work is done by the user's maintenance personnel, but it may also be done by Varian under the terms of a service contract.

The complete overhaul is detailed in the following pages and includes service of the following components:

Foreline Manifold
Diffusion Pump
Spectrometer Tube
Pump Valve Assembly
Valve Block Assembly
Mechanical Pumps

The following are required:

Tools: Screwdrivers (regular and Phillips); 7/16-inch open end and box wrench; 7/16-inch socket wrench with extensions and ratchet; 9/16-inch open end wrench; and pliers.

Parts: O-ring kit; Santovac 5, 65 cc; trichloroethane (TCE); methanol

NOTE

It is recommended that new O-rings be used when reassembling vacuum system. A complete kit is available (Varian Ordering Number: 0981-K4372-801).

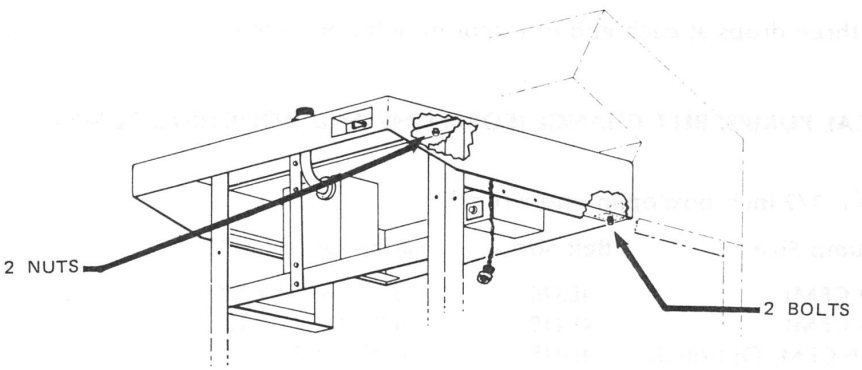

Figure 6-7. Removing Stainless Steel Counter Top

6-6.2 PREPARATION

1. Set the ELECTRONICS and DIFFUSION PUMP circuit breakers to OFF.
2. Turn the PUMPING MODE switch to the SERVICE VENT position.
3. Be sure that the test port (or the production fixture) is open.
4. Set the ROUGH circuit breaker to OFF.
5. Turn the PUMPING MODE switch to the SERVICE PUMP position.
6. When the diffusion pump has been off for 20 minutes, turn off the FOREPUMP circuit breaker.
7. Unplug power cord.

8. Remove all four access panels.
9. Disconnect shop air (or remove quick-disconnect fitting from built-in compressor).
10. Vent compressed air system by opening the valve on the bottom of the filter bowl.
11. Remove stainless steel counter-top.
    a. Unplug cable from the back of the START/VENT switch and allow to hang free.
    b. Using 7/16-inch socket wrench, remove the two nuts in the front top frame member and the two bolts at the rear of the side frame members (Figure 6-7).
    c. Unscrew the test port nut, plug, and the flat nut on the test port and set aside.
    d. Lift the front of the counter top free of the test port and remove. Set it aside.

NOTE

The counter top can be restored to nearly new condition by scrubbing it with Scotch-Brite or Beartex. Use long strokes, *only* from side to side, *not* front to back *or* rotary.

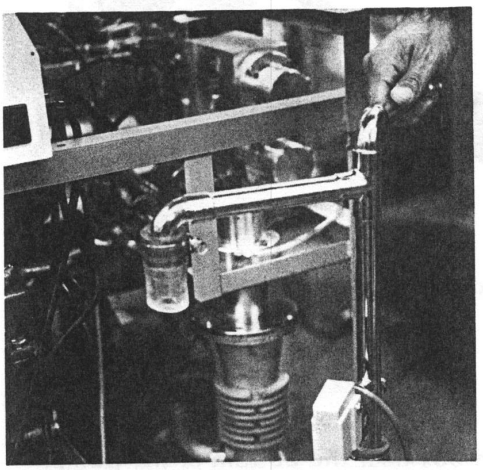

Figure 6-8. Removing Foreline Manifold

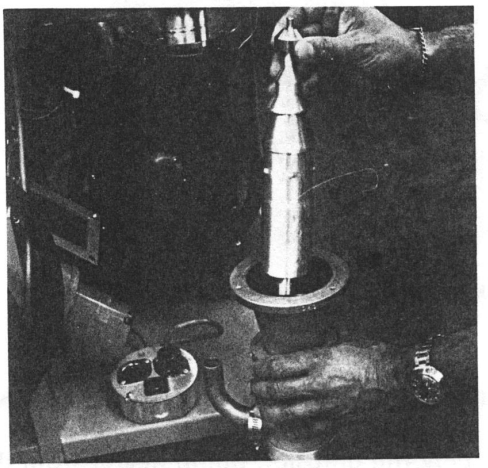

Figure 6-9. Lifting Jet Assembly Out of Diffusion Pump

6-6.3 FORELINE MANIFOLD, REMOVE AND CLEAN

1. Loosen hose clamps at either end.
2. Remove the two hex-head bolts at the valve block.
3. Unplug pressure switch at junction box.
4. Loosen compression fitting holding gross leak line.
5. Remove manifold from machine (see Figure 6-8).
6. Remove Tygon tubing. Replace if cracked or stiff.
7. If necessary, wash foreline assembly, first removing vacuum switch and thermocouple vacuum gauge. Trichloroethane (TCE) is recommended — preferably hot — followed by methanol (methyl alcohol) and thorough drying.

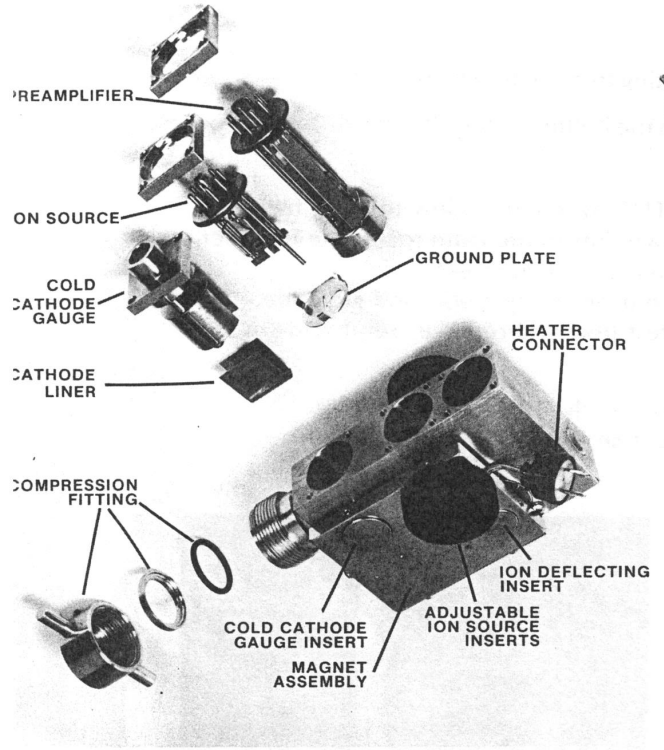

Figure 6-10. Spectrometer Tube (Exploded View)

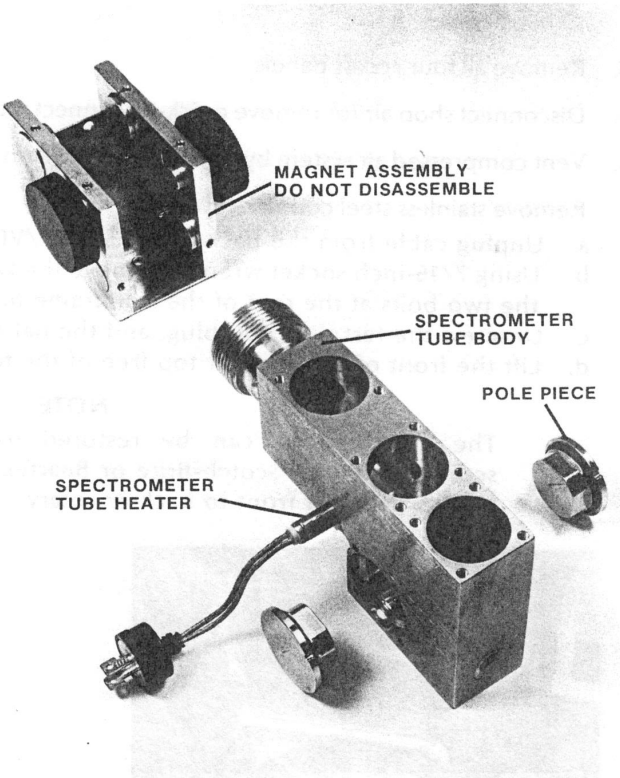

Figure 6-10a. Magnet Assembly, Heater and Pole Pieces

6-6.4 DIFFUSION PUMP, REMOVE AND CLEAN

1. Unplug the diffusion pump heater from the junction box near the bottom of the pump.
2. Remove the three Phillips head screws securing the diffusion pump inlet flange to the pump valve, and move the pump to a work area. Do not lose the spring on the top of the jet.
3. Clean and recharge the diffusion pump as follows:
   a. Remove the spring and carefully lift out the jet assembly (Figure 6-9). Wipe excess oil from jet.
   b. Pour out and discard used pump fluid, while pump is warm. Rinse out pump with TCE (heated by plugging in pump for 5 minutes). Then rinse with methanol and dry.
   c. Dismantle jet assembly and clean as above.
   d. Using fine abrasive paper, remove any baked-on deposits of carbon from the jet parts.
   e. Rinse all parts as above.
   f. Reassemble jet.

NOTE

An alternative to the TCE-methanol procedure is methanol, followed by acetone (to remove any hydrocarbons not removed by methanol). Then rinse with methanol and dry.

6-6.5 SPECTROMETER TUBE*; REMOVE, CLEAN AND REASSEMBLE

1. Remove the three electrical plugs at the top of the spectrometer tube. Unplug the spectrometer tube heater. Loosen the compression fitting and remove the spectrometer tube to a convenient bench. (Figure 6-10 is an "exploded" view of the spectrometer tube.)

CAUTION

Avoid placing the magnet on a steel or iron surface to prevent weakening the magnetic field.

2. Remove the compression fitting parts and the three mounting screws and take off the magnet assembly (Figure 6-10a). DO NOT DISASSEMBLE THE MAGNET.
3. Slide heater out of its recess.
4. Remove the cold cathode gauge, the ion source and the preamplifier. Discard the ion source, but handle the other two parts by flanged pin end only, to prevent contamination by skin contact. KEEP ONE HAND ON SPECTROMETER TUBE BODY WHEN REMOVING OR INSERTING PREAMPLIFIER to prevent damage by static discharge.
5. Slip out the baffle (Figure 2-1) between the cold cathode gauge and the ion source cavities. Carefully remove the ground slit plate with "shoe hook" or thin screwdriver from the ion source cavity.
6. Using fine abrasive paper, remove heavy deposits from all surfaces of spectrometer tube body, baffle, ground slit plate, cold cathode gauge liner and anode loop, until bare metal surfaces are exposed. (NOTE: Do not use crocus cloth, as it leaves a residue.)
7. Remove four Phillips screws on each side of the tube body and slip out both pole pieces. Remove the O-rings and then clean these with the spectrometer tube body, avoiding use of abrasives to preserve the plating. Pole pieces are interchangeable.
8. The spectrometer tube body, pole pieces, baffle, ground slit plate and cold cathode gauge parts may now be boiled for 20 to 30 minutes in Alconox solution,* rinsed with hot water, methanol and dried. (Baking in an oven to 150°C (300°F) is desirable, but not essential.) Do not use acetone for cleaning the spectrometer tube.
9. Reassemble the tube, heater, pole pieces and magnet assembly. When installing ground slit plate, be sure that snap prongs are facing up. Align slit at 90° with sidewall of spectrometer tube and/or concentrically align circular hole in plate with smaller guide hole in bottom of ion source cavity.
10. Wipe the new O-ring and mating surfaces with clean lint-free cloth and place new ion source in cavity. Locating pin should be approximately in center of guide hole. Be sure that pins 1 and 8 are parallel to the sidewall of the spectrometer tube (Figure 6-11). Tighten hold-down flange evenly and firmly. (A straight edge held against pins 1 and 8 of both octal arrays is a convenient way to assure parallelity.)
11. Install preamplifier and cold cathode gauge, using new O-rings. Tighten clamps evenly and securely.
12. Set assembled spectrometer tube in a clean place.

*Rebuilt spectrometer tubes (Varian #9109-K4565-301) are available from Varian Lexington Vacuum Division on an exchange basis. Contact nearest Varian Vacuum Division office for details.

**1/2 teaspoon per quart of water.

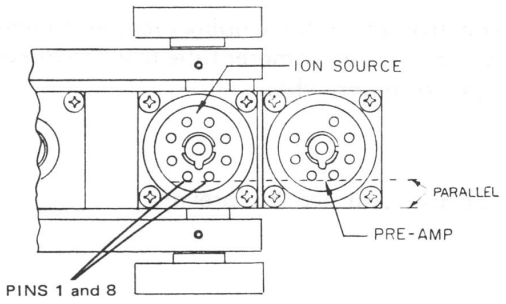

Figure 6-11.

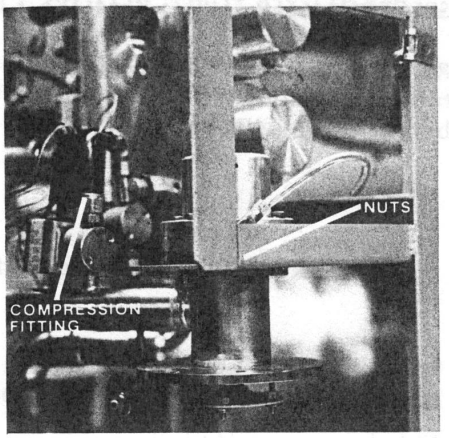

Figure 6-12. Removing Pump Valve

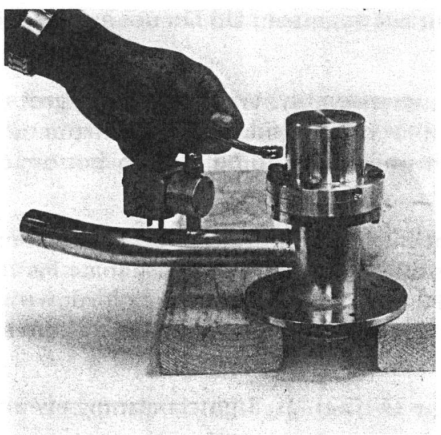

Figure 6-13. Removing Actuator from Pump Valve Body

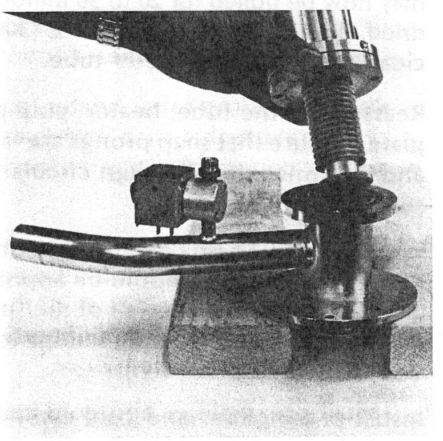

Figure 6-14. Lifting out Actuator

6-6.6 PUMP VALVE ASSEMBLY, REMOVE AND SERVICE

1. Loosen compression fitting at the top of the service valve until the nut is free.
2. Disconnect wires to the service valve.
3. Remove compressed air line from pump valve actuator.
4. Remove the three nuts securing the pump valve assembly to the orange frame (Figure 6-12). Remove the assembly to a bench.
5. Using a 7/16-inch wrench, remove the four bolts securing the pump valve actuator to the valve body, backing them out evenly to avoid binding as the valve spring expands. Lift out the actuator (Figure 6-14). Wash the bellows and sealing disc with methanol and dry thoroughly. If the bellows is to be replaced, see paragraph 6-7.5.
6. Remove the pneumatic cylinder ("top hat") from the piston and check the piston for lubricant. There should be oil on the cylinder (from the air line lubricator) and grease on the piston. Replenish the grease, if necessary, with Lubriplate 55555, or equivalent.
7. Reach one or two fingers into the pump valve body and lift out the O-ring retaining ring and then the O-ring. If fresh O-rings are available, discard the old one.
8. Wash the complete pump valve body assembly with methanol and dry thoroughly. If the nuts securing the baffle are disturbed, reposition them and tighten *securely* so that the baffle flange is 0.56 +0.02 inches (14.2 +0.5mm) from the underside of the pump valve flange (Figure 6-15).
9. Install new O-ring in pump valve body, placing it carefully in the recess.
10. Install O-ring retainer, pressing it down firmly all around.
11. Clean or replace O-ring between bellows flange and pump valve upper flange and install.
12. Install pneumatic actuator. Be sure the hole for the compressed air line is located as shown in Figure 6-16).

NOTE

The gap of approximately 3/16" between the flanges is normal. Tighten the four bolts evenly to keep valve actuator properly aligned as the spring is compressed.

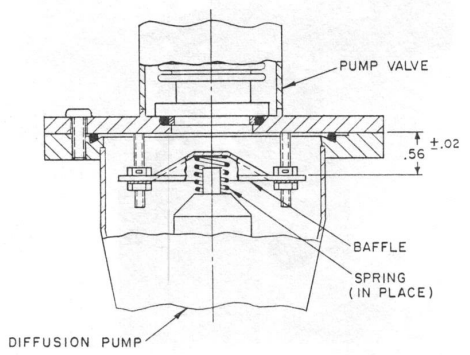

Figure 6-15. Correct Baffle Position

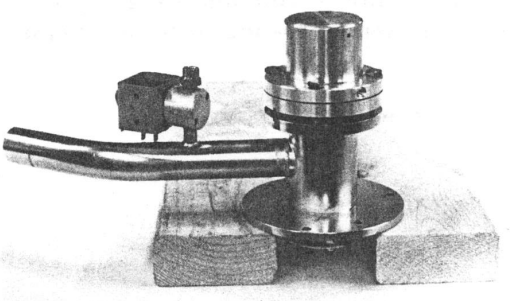

Figure 6-16. Pneumatic Actuator (Ready for Bolt Tightening—Note Gap)

6-6.7 VALVE BLOCK ASSEMBLY, REMOVE

1. Using a screwdriver, disconnect compressed air lines from the two valve actuators.
2. Disconnect all electrical plugs at the valve block; vent valve, thermocouple gauge, gross leak valve, calibrating leak valve, (if this option is present).
3. Using a Phillips screwdriver, remove the three screws securing the roughing line to the bottom of the valve block.
4. Using a 7/16-inch wrench, remove the top and bottom bolts from the front of the valve block bracket. Lift the valve block assembly to clear the frame cross-member, then swing the bottom clear and remove (Figure 6-17).

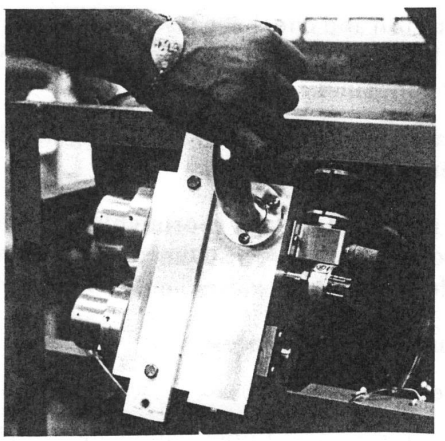

Figure 6-17. Lifting Valve Block Assembly Clear of Frame

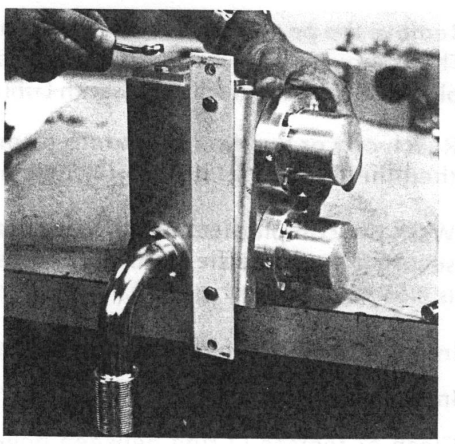

Figure 6-18. Removing Cover Plate from Inverted Valve Block

NOTE

Be very careful not to contaminate any part of the vacuum system or O-rings with this grease.

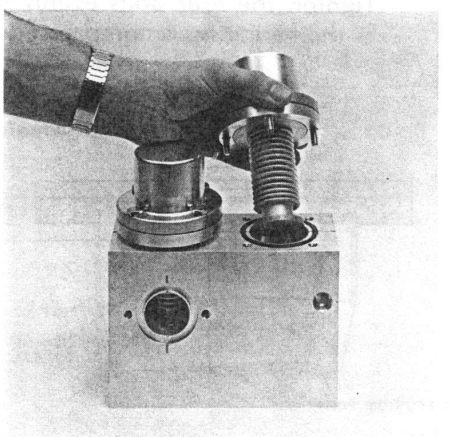

Figure 6-19. Removing Actuators from Valve Block

6-6.8 VALVE BLOCK ASSEMBLY, DISASSEMBLE AND CLEAN (Figure 6-20 is an "exploded" view)

1. Remove screws holding vent valve (4) and calibrating leak (17), then remove the gross leak valve (33), vent valve (with its O-ring retainer), calibrating leak and thermocouple gauge (11) from the valve block by pulling straight out. Set them aside.
2. With the valve block inverted, remove the cover plate (28) from the bottom (Figure 6-18). Clean it, wipe the O-ring and set them aside.
3. Remove test port manifold (24).
4. Place the valve block on a soft surface (rubber or cloth pad) with the valve actuators up. Use a 7/16-inch wrench to remove each of the actuators, backing out the screws evenly to avoid binding as the valve spring expands.
5. Lift out the actuator (Figure 6-19). Wash the bellows and sealing disc with methanol and dry thoroughly. If the bellows is to be replaced, see paragraph 6-7.5.
6. Remove the pneumatic cylinder ("top hat") from the piston and check the piston for lubricant. There should be oil on the cylinder (from the air line lubricator) and grease on the piston. Replenish the grease, if necessary, with Lubriplate 55555, or equivalent.
7. Reach one or two fingers into the valve cavity and lift out the O-ring retaining ring and then the O-ring. If fresh O-rings are available, discard the old one.
8. Check entire valve block and remove any remaining O-rings. DO NOT USE METAL TOOL TO REMOVE ANY O-RING. This prevents scratching of sealing surfaces.
9. Clean valve block with methanol and dry thoroughly.

6-6.9 ROUGH PUMP AND FOREPUMP, SERVICE

1. Perform appropriate work in paragraphs 6-3 and 6-4 if required at this time. See Schedule 6-1.
2. Remove and clean the roughing line.
3. Install roughing line. Do not tighten hose clamps yet.

NOTE

Replace Tygon tubing if cracked or stiff.

6-6.10 REASSEMBLE AND INSTALL VALVE BLOCK ASSEMBLY

1. Replace O-rings in rough and test valve cavities. Be sure they are properly in the recess provided.
2. Install O-ring retaining rings in both cavities, pressing them down all around.
3. Clean or replace O-rings between bellows flange and valve block and install.
4. Install the actuators. Be sure the compressed air inlet holes are at the front of the block.

NOTE

The gap of approximately 3/16" between the flanges is normal. Tighten the four bolts evenly to keep valve actuator properly aligned as the spring is compressed.

Note: Refer to page 8-15
for parts listing by number.

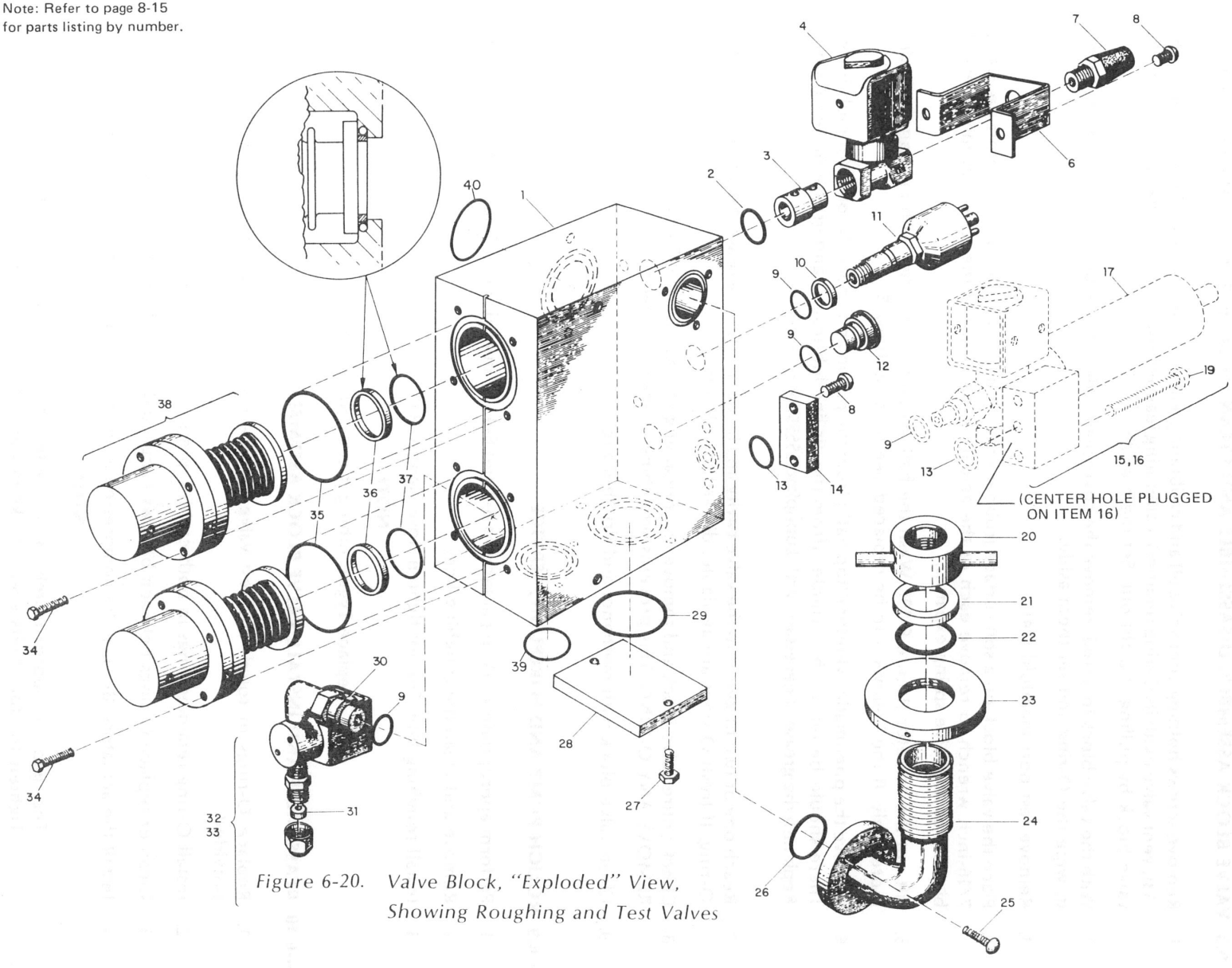

Figure 6-20. Valve Block, "Exploded" View, Showing Roughing and Test Valves

5. Install the test port manifold and O-ring.
6. Install the cover plate and O-ring on the bottom of the valve block.
7. Clean O-ring and sealing surface of gross-leak valve and install at back of block.
8. Clean the O-ring and sealing surfaces of the vent valve and O-ring retainer, and install, tightening the clamp securely.
9. Clean the O-ring and sealing surfaces and install the 531 thermocouple gauge or new gauge tube.
10. Clean the O-rings and sealing surfaces and install the calibrating leak (optional) or cover plate and plug.
11. Place valve block in cabinet, upper end first.
12. Install two hex-head bolts, finger-tight, securing the valve block mounting plate to the frame.
13. Clean the O-ring for the roughing line flange, place it in position at the bottom of the block, and install three Phillips screws, finger tight.

6-6.11 INSTALL PUMP VALVE ASSEMBLY AND SPECTROMETER TUBE

1. Place pump valve assembly in cabinet with bolts protruding through holes in the diffusion pump support bracket.
2. Place nuts on the three bolts, finger tight.
3. Clean the rubber sealing bushing on the copper tubing from the gross leak valve; lubricate lightly with Apiezon L, start in fitting at the top of the service valve and tighten nut finger tight.
4. Install spectrometer tube on inlet pipe, and locate it on a level portion of its shelf. Tighten compression fitting securely.
5. Tighten nuts under diffusion pump support bracket.
6. Tighten compression fitting at service valve.

6-6.12 INSTALL DIFFUSION PUMP

1. Install jet in diffusion pump body so that two of the five guide protrusions straddle the foreline opening. Be sure that the jet is firmly seated (top approximately 1/2 inch below pump flange) (Figure 6-22).
2. Pour in 65 cc of Santovac 5 diffusion pump fluid.
3. Place new O-ring in groove.
4. Place spring on top of jet.
5. Install diffusion pump with foreline toward the back of the cabinet.

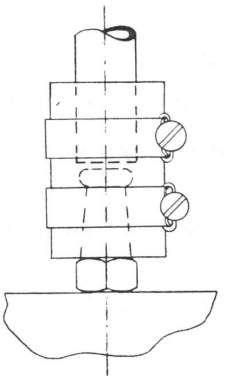

Figure 6-21. Optimum Location of Clamps to Minimize Area of Tygon Exposed to Vacuum

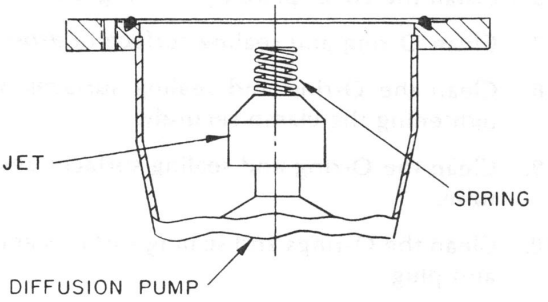

Figure 6-22. Position of Jet Top When Jet is Firmly Seated

6-6.13 INSTALL FORELINE MANIFOLD

1. Using the original or replacement Tygon tubing, install the foreline manifold in the cabinet.
2. Place the O-ring in the groove at the back of the valve block and install two hex-head bolts through the flange finger tight. Tighten hose-clamps at fore pump, and at diffusion pump foreline.
3. Tighten the two bolts at the front of the block, securing it to the frame.
4. Tighten the two hex-head bolts securing the foreline assembly to the back of the valve block.
5. Tighten the three Phillips screws at the roughing line flange.
6. Tighten the hose-clamps at the roughing pump. Locate the clamps close to the ends of the metal tubing as shown. This minimizes the area of Tygon surface exposed to vacuum (Figure 6-21).
7. Clean the rubber sealing bushing on the gross leak line, lubricate lightly with Apiezon L, and connect it.
8. Plug the cords from the diffusion pump heater and the foreline pressure switch into the junction box.

6-6.14 PNEUMATIC HOOKUP

1. Connect the air-line labelled 2 to the rough valve actuator (stamped 2).
2. Connect the air-line labelled 1 to the test valve actuator (stamped 1).
3. Connect the remaining air-line to the pump valve actuator.

6-6.15 ELECTRICAL HOOKUP

1. Connect the lugs on the white/violet and **red** wires to the gross leak valve (in all of these steps, the orientation of the plug is immaterial).
2. Connect the lugs on the white/violet and **black** wires to the vent valve.
3. Connect the lugs on the white/violet and **blue** wires to the calibrating leak valve.

4. Connect the thermocouple gauge and spectrometer tube (including the heater and high voltage lead).
5. Check that all cords from pumps, compressor (if present), spectrometer tube and valve control cables are connected. (See Figure 6-23.)

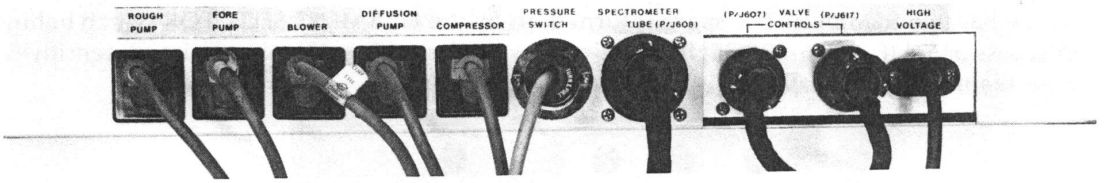

Figure 6-23.

6. Check that cooling air filter is clean and in place.
7. Replace rear panel.
8. With all circuit breakers off, plug the machine into appropriate power source. Compressor (if present) will start.
9. If no compressor is present, reconnect to the source of compressed air.

6-6.16 CHECK OUT FOR RETURN TO SERVICE

1. Remove START/VENT switch assembly from the stainless steel top by unscrewing knurled nut at base of switch handle. Connect switch assembly to cable to permit operation of the leak detector while the top is off.
2. Refer to paragraph 4-3.2 and follow steps for start-up. Verify each step as it happens (sides and tops are still off machine).
3. When the leak detector is fully operational, use a helium probe and check all joints for leakage (see paragraph 6-10).
4. When all leaks have been corrected, replace the stainless steel top and bolt down with the two bolts and two nuts (see paragraph 6-6.2), first routing the cable as shown in Figure 6-24.
5. Install START/VENT switch assembly in stainless steel top, tightening knurled nut.
6. Replace side and front panels.

Annual maintenance is complete and leak detector is now ready for operation.

Figure 6-24. Correct Routing of Cable Before Installing Top

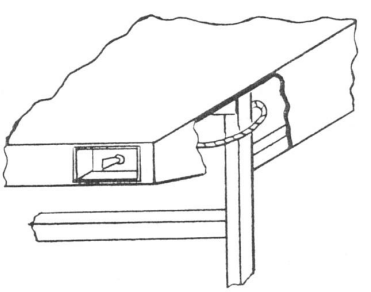

6-7. AS-REQUIRED MAINTENANCE

6-7.1 ION SOURCE REPLACEMENT

Tools: Screwdriver

Parts: Replacement ion source

The ion source has two filaments. The spare is turned on by the FILAMENT SELECTOR switch behind the locked access panel (Figure6-26). Slight retuning may be desirable to obtain maximum sensitivity; however, the filaments are usually close to the same adjustment.

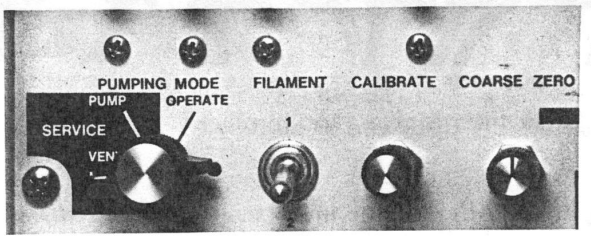

Figure 6-26.

The filaments have long life. However, if ultimate failure of the spare filament will upset critical production testing, the ion source may be replaced as soon as convenient after the spare has been put into use (replacement takes about 10 minutes). Otherwise, just use the spare as long as it lasts, then discard the source.

The spectrometer tube operates at a very high vacuum produced by the diffusion pump. Service of the spectrometer tube requires that this vacuum be vented to the atmosphere. However, the diffusion pump must be protected and this is accomplished by the pump valve. The operation of all the valves is automatically controlled by the PUMPING MODE switch to insure safe and proper sequencing. Figure 6-25shows the position of the valves in the SERVICE VENT and two pumping modes. Proceed as follows:

1. Open the tuning controls door.
2. Place the START/VENT switch in the RESET position.
3. Turn electronics off.
4. Turn PUMPING MODE switch to the SERVICE VENT position.
5. Remove right side panel. Remove the three electrical plugs at the top of the spectrometer tube. Unplug the heater. Loosen the compression fitting and pull to break vacuum. (Figure 6-27 is an "exploded" view of the spectrometer tube.)

CAUTION

Avoid placing the tube on a steel or iron surface to prevent weakening the magnetic field.

6. Remove four screws and discard spent ion source.
7. Inspect ion source cavity to verify that it is clean. (If not, see paragraph 6-6.5.) If ground slit plate is not clean, carefully remove it with "shoe hook" or thin screwdriver. Replace it or clean it, using emery cloth.

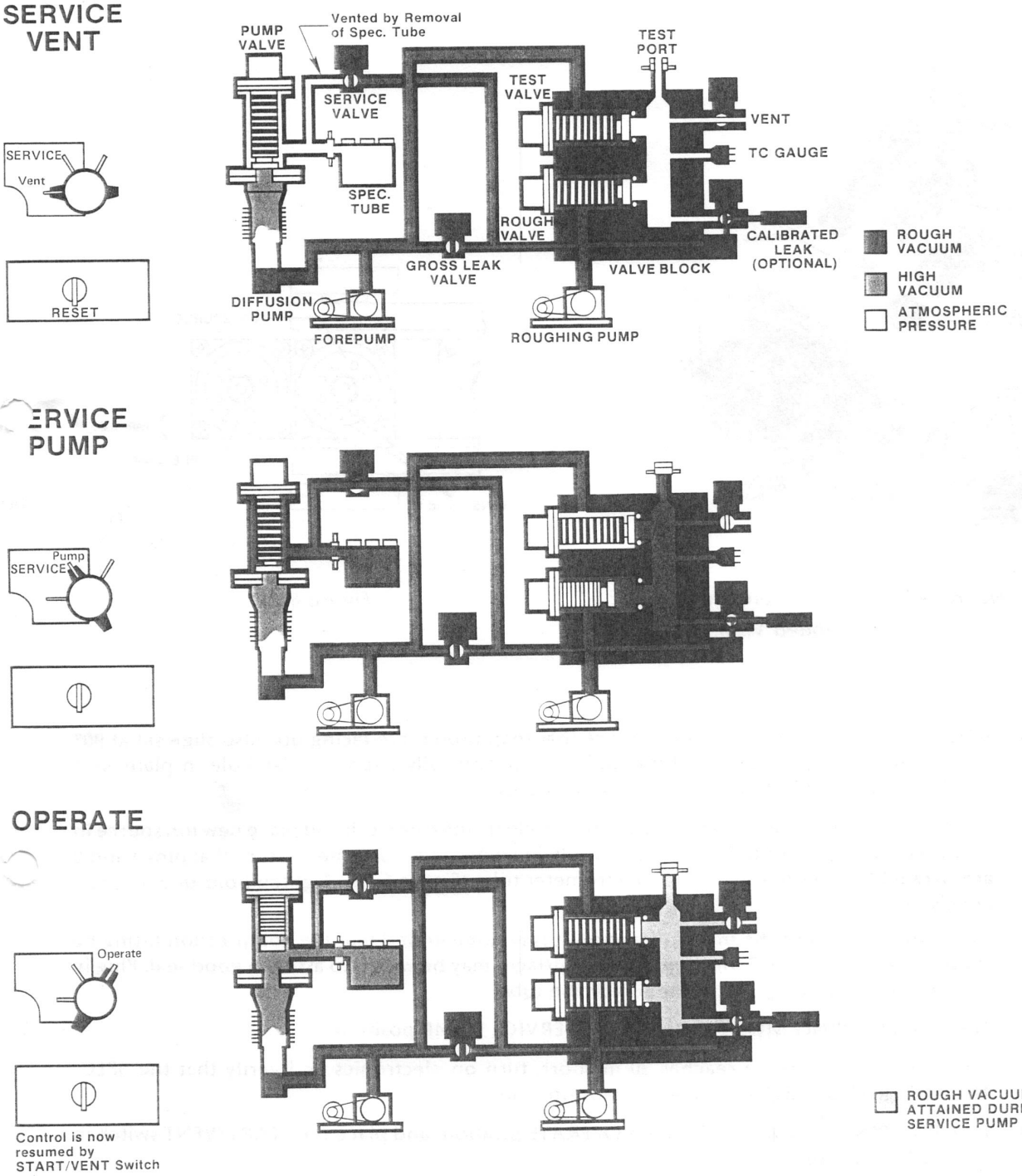

Figure 6-25. Service Vent, Service Pump and Operate Modes Showing Position of Pump and Other Valves.

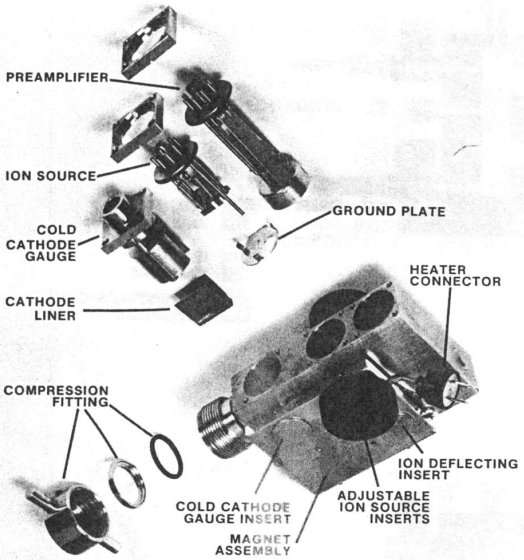

Figure 6-27. Spectrometer Tube (Exploded View)

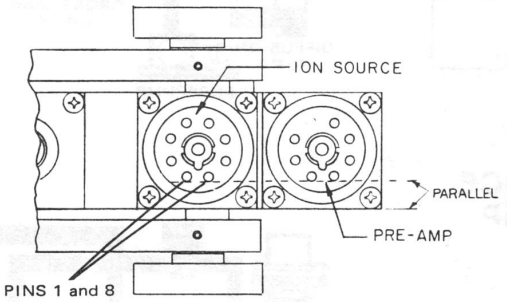

Figure 6-28.

8. When installing ground slit plate, be sure that snap prongs are facing up. Also align slit at 90° with sidewall of spectrometer tube and/or concentrically align circular hole in plate with smaller guide hole in bottom of ion source cavity.
9. Wipe the new O-ring and mating surfaces with clean lint-free cloth and place new ion source in cavity. Locating pin should be approximately in center of guide hole. Be sure that pins 1 and 8 are parallel to the sidewall of the spectrometer tube (Figure 6-28). Tighten hold-down flange evenly and firmly.
10. Install spectrometer tube in leak detector. It is recommended that the compression fitting be dismantled so that the O-ring and mating surfaces may be wiped to assure a good seal. Plug in heater and the three plugs at the top of the tube.
11. Turn the PUMPING MODE switch to the SERVICE PUMP position.
12. When test port pressure reaches 20 millitorr, turn on electronics and verify that the SPECTROMETER TUBE PRESSURE meter reads upscale.
13. Turn PUMPING MODE switch to the OPERATE position, and place the START/VENT switch in the START position.
14. When the spectrometer tube pressure reaches the green band, turn on the filament.
15. Open calibrated leak.

NOTE

If the leak detector does not have built-in calibrated leak, cycle to VENT and install calibrated leak in test port.

16. Since tuning usually changes slightly after installation of a new ion source, make the necessary adjustments (especially to the large black magnet knobs) to obtain the maximum helium signal. (See paragraph 4-4.)

17. Replace side panel. Leak detector is now ready for use.

6-7.2 COLD CATHODE GAUGE CLEANING

1. Usually this is done whenever the ion source is changed, but if it needs to be done independently, the first steps are the same as those for the ion source (steps 1-5), paragraph 6-7.1).

2. Remove the cold cathode gauge from spectrometer tube.

3. Slip out the cathode liner. If it is dirty, clean it with emery cloth, or replace it. To dismantle the gauge, which is rarely necessary, see Figure 6-29. If anode must be removed, twist it **to loosen** while pulling to prevent cracking ceramic feedthrough. This will **appear** to be screwing loop onto pin.

4. Any other necessary spectrometer tube service should be done now.

5. Install the cold cathode gauge, preferably using a new O-ring. Wipe the O-ring and mating surface with clean lint-free cloth.

6. Follow steps 10 through 17 of paragraph 6-7.1 to restart leak detector.

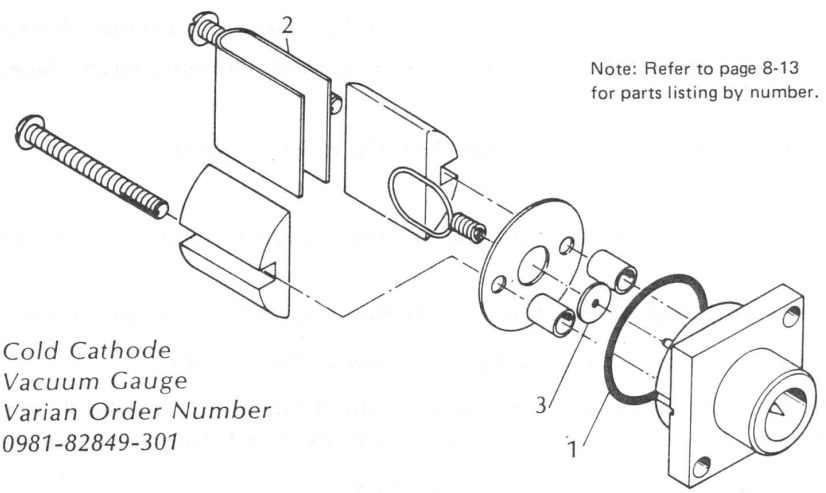

Note: Refer to page 8-13 for parts listing by number.

Figure 6-29. Cold Cathode Vacuum Gauge Varian Order Number 0981-82849-301

6-7.3 SPECTROMETER TUBE CLEANING

Normally this is done as part of the complete overhaul but if it is required at any other time, proceed as follows:

6-7.3.1 Removal

Follow steps 1-5 in paragraph 6-7.1.

6-7.3.2 Disassembly and Cleaning

Follow steps 2-11 in paragraph 6-6.5.

6-7.3.3 Installation

1. Install spectrometer tube in Leak Detector, cleaning the O-ring of the compression seal. Connect heater, high voltage lead, ion source and preamplifier.
2. Turn the PUMPING MODE switch to SERVICE PUMP. When the TEST PORT PRESSURE is 20 millitorr or less, turn on the ELECTRONICS circuit breaker and verify that the SPECTROMETER TUBE PRESSURE meter indicates upscale.
3. Turn the PUMPING MODE switch to OPERATE and proceed to check the sensitivity as in Paragraph 4-4.

6-7.4 DIFFUSION PUMP CLEANING

The air-cooled HSA-150 diffusion pump keeps the spectrometer tube pressure generally below 0.01 millitorr.

Santovac 5 is recommended. Silicone fluids, though generally excellent, must not be used because they deposit insulating films on the ion source after a few weeks, with consequent loss of sensitivity. The charge is 65 cc. Normally it takes 12 to 18 months to deplete the charge to a minimum level; symptoms are fluctuating sensitivity and spectrometer tube pressure.

Cleaning is seldom required because the HSA-150 purges itself of contaminants by fractionation. Inability to maintain low green-band operation (despite absence of vacuum system leaks) and/or increased sensitivity, together with instability, are indications of contaminated fluid.

Whenever the pump is to be recharged with oil, it should be thoroughly cleaned. Proceed as follows:

1. Turn off the rough pump, diffusion pump, electronics and filament switch. Place START/VENT switch in the RESET position.
2. Turn the PUMPING MODE switch to the SERVICE VENT position.
3. Remove the left side panel.
4. Unplug the diffusion pump heater from the junction box near the bottom of the pump (Figure 6-30).
5. When the diffusion pump has been off for 20 minutes, turn off the fore pump.
6. Loosen the lower hose clamp on the Tygon tubing at the foreline.
7. Remove the three Phillips head screws securing the diffusion pump inlet flange to the pump valve, and move the pump to a work area. Do not lose the spring on top of the jet.
8. Clean and recharge the diffusion pump as follows:
   a. Remove the spring and carefully lift out the jet assembly (Figure 6-31). Wipe excess oil from jet.
   b. Pour out and discard used pump fluid, while pump is warm. Rinse out pump with TCE (heated by plugging in pump for 5 minutes). Then rinse with methanol and dry.
   c. Dismantle jet assembly and clean as above.
   d. Using fine abrasive paper, remove any baked-on deposits of carbon from the jet parts.
   e. Rinse all parts as above.
   f. Reassemble jet.
   g. Fill with 65cc of Santovac 5.

NOTE

An alternative to the TCE-methanol procedure is methanol, followed by acetone (to remove any hydrocarbons not removed by methanol). Then rinse with methanol and dry.

9. Install the jet assembly, being sure that two of the five guide protrusions straddle the foreline opening, and that the jet assembly is seated as far down as shown in Figure 6-32.
10. Replace diffusion pump in cabinet, being careful to locate the spring on top of the jet assembly and the O-ring on the flange.
11. Replace and tighten (evenly) the three Phillips screws.
12. Replace Tygon tubing on foreline and tighten the hose clamp.
13. Plug in diffusion pump heater.
14. Turn the PUMPING MODE switch to the SERVICE PUMP position.
15. Turn on roughing pump, forepump and diffusion pump. Set sensitivity control (in the back of the turret) to LOW to speed the warm-up of the diffusion pump.
16. Allow 30 minutes for the diffusion pump to warm up, then turn on ELECTRONICS circuit breaker. Verify that the SPECTROMETER TUBE PRESSURE meter reads upscale, then turn the PUMPING MODE switch to OPERATE.
17. When the SPECTROMETER TUBE PRESSURE meter reaches the green band, turn on the filament.
18. Place the START/VENT switch in START, and when the TEST lamp lights, leak-check the diffusion pump inlet flange and foreline tubing.
19. Replace side and front panels, check the leak detector's sensitivity (paragraph 4-4) and return it to use.

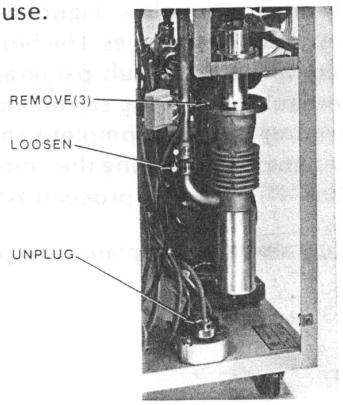

Figure 6-30. Removing Diffusion Pump

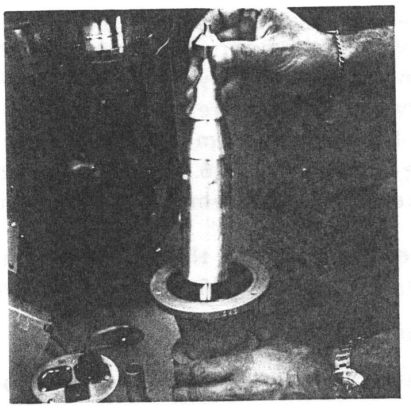

Figure 6-31. Lift Jet Assembly Out of Diffusion Pump

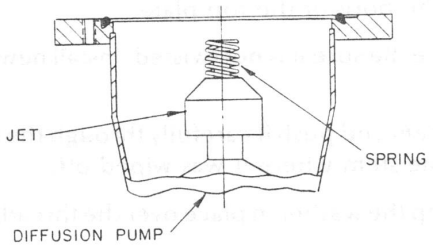

Figure 6-32. Position of Jet Top When Jet is Firmly Seated

Note: Refer to page 8-16
for parts listing by number.

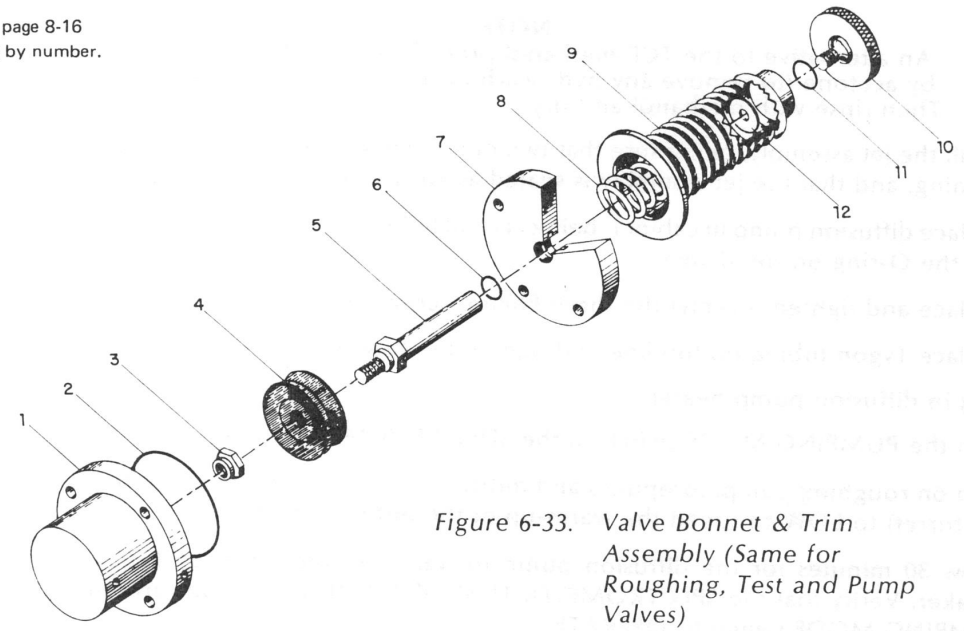

Figure 6-33. Valve Bonnet & Trim Assembly (Same for Roughing, Test and Pump Valves)

6-7.5 SERVICING THE BELLOWS-SEALED VALVES

Occasionally the valves will need cleaning. Also, after many thousands of operations, if a bellows develops a leak, it must be replaced. Directions for disassembly are given below. Figure 6-33 is an exploded view of the bonnet and trim assembly of the roughing, test, and pump valves. The bonnet and trim assemblies will usually have been removed as part of the complete overhaul: paragraph 6-6.6 (pump valve) or 6-6.7 (valve block assembly). If the complete overhaul is not being carried out at this time, the bonnet and trim assemblies can be removed by carrying out the complete shutdown procedure in paragraph 4-6.4, then disconnecting the main power line and relieving the compressed air pressure. Once the assembly has been removed, and the "top hat" (1) removed, proceed as follows:

1. Place a wrench on the hex between the rubber piston cup and the top plate. Grasping the knurled seal disc (10) by hand, unscrew it.
2. Remove the bellows (9), washer (12) and spring (8).
3. Withdraw the stem (5) with the piston cup (4) attached.
4. Remove the quad ring (6) from the bore of the top plate (7) and the O-ring (11) from the back of the seal disc.
5. Clean all parts thoroughly, especially the groove in the bore of the top plate.
6. Install new quad ring, rolling it carefully into the groove. Be sure it is not twisted. Install new O-ring in the seal disc.
7. Place a light film of grease (see step 11 below) on the stem and push it carefully through the top plate **from the flat side.** Put a little more grease on the stem where it was wiped off.
8. With the seal disc on a table, set the bellows over it. Drop the washer in place over the threads of the seal disc; follow with the spring.

9. Now place the top-plate-and-stem assembly into the spring.
10. Compressing the spring (between the piston cup and the seal disc) screw the seal disc securely into the stem.
11. Replenish the grease on the piston cup. Use Lubriplate 55555, or equivalent.

NOTE

Be very careful not to contaminate any part of the vacuum system or O-rings with this grease.

12. Using a new O-ring (2), install the air cylinder body. The bonnet and trim assembly is now ready to be reinstalled in the leak detector.

6-7.6 SERVICING THE SOLENOID VALVES

The vent, service and gross leak valves are solenoid operated. They are replaceable as complete units.

To clean the seat of the valve, it is necessary to have the valve out of the machine. The vent valve can be removed safely any time the test port is vented. To remove the gross leak valve, follow the procedure of paragraph 4-6.4 for complete shutdown.

1. With the valve on a bench, remove the solenoid coil by prying off the red cap.
2. Unscrew the actuator seal ring with a spanner in the two slots.
3. Carefully lift off the actuator, observing the order of assembly of the armature and spring, and the **direction** of assembly of each. They **must** be reassembled in the same order and direction.
4. Inspect the metal and rubber components of the poppet seal carefully. If they are not damaged, clean them.
5. Clean and lubricate the O-ring which seals the actuator seal ring and place it in the valve body.
6. Reassemble the valve, tightening the actuator seal ring securely with a spanner.
7. Clean and lubricate the O-rings and/or rubber ferrules sealing the valve to the leak detector and install the valves.

6-8 ELECTRONIC SYSTEM

The electronic system is fully solid-state. It does not require preventive maintenance. Owing to a thorough 5-day operating check before shipment, component failure is rare and reliability is high.

6-8.1 UNITS AND MODULES

To simplify location and correction of any malfunction that might occur, the complete electronic system is divided into eight physically separate units, each with a block number for component part identification, as follows:

1.	Power Supply and Emission Regulator Board	100-199
2.	Amplifier and Set Point Board	200-299
3.	Leak Indicator (includes audible alarm, if present)	300-399
4.	Diffusion Pump Constant Power Controller	400-499
5.	High Voltage Power Supply	500-599
6.	Subchassis, front panel, etc.	600-699
7.	Valve Block Assembly	700-799
8.	Spectrometer Tube	800-899

The system schematics are at the end of the manual and components within the units are numbered to correspond with the blocks above. For example, S603 is a switch on the control panel.

Electrical connectors are also numbered according to this system. The first digit of the connector number indicates the unit on which the connector is located, and the third digit indicates the unit to which that cable is connected. The second digit is used when there is more than one cable (or connector) with the same location and destination. For example, the connectors P/J 106, P/J 116 and P/J 126 are all located on the Power Supply and Emission Regulator board; all the wires from these connectors go to the Subchassis or Front Panel.

6-8.2 CIRCUITS

For descriptive purposes, it is easier to divide the electronics system into nine circuits:

Spectrometer tube
Electrometer amplifier
Filament protection
Spectrometer power supply
Emission regulator
Audible alarm (optional)
Indicator lamps
Thermocouple gauge
Diffusion Pump Constant Power Controller

These are described in detail in the following paragraphs.

6-8.3 SPECTROMETER TUBE

As described in detail in Section II, this is the heart of the system. All external circuits either contribute to its operation or gather information from it. From the electronic viewpoint, there are three essential assemblies served by the external circuits:

1. The cold cathode gauge, which measures the total pressure within the spectrometer tube.
2. The ion source, which ionizes the gas molecules and shapes and directs the ion beam into the magnetic field. (The magnetic field then separates the helium ions from other ions in the ion beam and directs them to the collector.)
3. The preamplifier assembly, which collects and amplifies the small helium ion current so that it may be sent through the interconnect cable without being affected by external influences. This unit requires special care in handling because its ultra-high sensitivity makes it susceptible to damage from static discharges.

6-8.4 ELECTROMETER AMPLIFIER

The signal from the preamplifier in the spectrometer tube is amplified by a meter amplifier (A204). The feedback resistance of this amplifier is selected by the Range Select switch (S321). The gain of the amplifier is controlled by the CALIBRATE adjustment on the control panel.

6-8.5 FILAMENT PROTECTION

In normal operation (PUMP MODE switch in OPERATE), the cold cathode gauge senses the spectrometer tube pressure and shuts off the filaments when pressure is above 0.2 millitorr.

Further, if current ever stops flowing in the diffusion pump heater (foreline pressure switch or vane switch opens or heater burns out) the current sensing relay K613 will drop out, simultaneously lighting the DP OFF lamp and shutting off the filament.

In the service modes the filament is shut off by contacts of the PUMPING MODE switch.

If the filament ON, AUTO-RESET, OFF switch is in the ON position, the filament will shut off in any of the events described above. To turn it back on, move the switch to the AUTO RESET position. If conditions have been restored to normal, the filament will light and the switch can then be returned to the ON position.

If the switch is in AUTO RESET position when the filaments are shut off as described above, the filament will automatically turn back on when conditions are restored to normal.

If the filament mode switch is in the OFF position the filament will remain off under all conditions.

NOTE

Restoration of filament power and emission does **not** restore the leak detector to TEST mode; this requires resetting the START/VENT switch **after** emission is restored.)

6-8.6 SPECTROMETER TUBE POWER SUPPLY

The several electrode voltages in the ion source are furnished by a regulated power supply, appropriately tapped and with fine control applied by the ION voltage, REPELLER voltage, and FOCUS voltage adjustments on the control panel.

The power supply for the solid state preamplifier is a separate dual 15-volt supply located in the lower cabinet adjacent to the spectrometer tube.

The power supply which furnishes the 2,000 volt power to the cold cathode gauge is located in the subchassis. It is a filtered supply and the current drawn from it is displayed on the TEST PORT PRESSURE meter, calibrated in units of pressure.

6-8.7 EMISSION REGULATOR

The emission regulator uses negative feedback to control the firing of a triac (CR601, located on the Power Control subchassis) to furnish power to the filaments.

Flow of electrons from the filament to the ion chamber (emission) can be controlled from 0.1 milliamperes (mA) to 2 mA, and is displayed on the EMISSION meter on the control panel. If the emission drops below 0.1 mA, relay K101 drops out. In this event the TEST lamp is precluded from lighting, and the LEAK RATE meter is not operative.

6-8.8 AUDIBLE ALARM (OPTIONAL)

The audible alarm circuit is located in the Leak Indicator module. This is a voltage-to-frequency converter. Its voltage-sensing threshold as well as its volume is adjustable from the Leak Indicator front panel.

6-8.9 INDICATOR LAMPS

The TEST lamp (green) indicates that (1) the test valve is commanded open, and (2) the filament is emitting electrons. If lighted together with the (red) GROSS LEAK lamp, it indicates that (1) the gross leak valve is commanded open, and (2) that the filament is emitting electrons.

NOTE:

Valid testing is impossible when the TEST lamp is off.

The GROSS LEAK lamp indicates that rough pumping is in progress and the selected transfer pressure has not been reached. If the GROSS LEAK and REJECT lamps are lighted together, the test port pressure is above a safe level for automatic gross leak testing. This pressure is preset at the factory at approximately 700 millitorr. If the GROSS LEAK and TEST lamps are lighted together, the test port pressure is below the preset 700 millitorr, but above the selected transfer pressure. The gross leak valve is open, and testing can be carried out. The GROSS LEAK lamp is a reminder that the leak detector is operating at lower sensitivity than that of the standard test mode, so it can indicate larger leaks. (If measurement of leak size is necessary in the GROSS LEAK mode, the leak detector must be calibrated in this mode.)

6-8.10 THERMOCOUPLE GAUGE

The thermocouple gauge senses the test port pressure. Its associated circuitry performs three functions: First, it indicates the pressure on the TEST PORT PRESSURE meter on the control panel. Second, it controls the opening of the gross leak valve (if the GROSS LEAK switch is on). Third, it controls the opening of the test valve (and the simultaneous lighting of the TEST lamp if the filament is on). The thermocouple gauge is powered by the 24-volt control transformer, so pressure is indicated whenever the machine is connected to line power.

6-8.11 SENSITIVITY (DIFFUSION PUMP POWER) CONTROL

The Diffusion Pump Power Control circuit permits the power to the diffusion pump to be adjusted, then maintains power constant, despite fluctuations in line voltage. The setting is made on the **SENSITIVITY** control at the back of the turret near the fuses.

Sensitivity is increased by turning the SENSITIVITY control toward HIGH. (Allow 10 minutes for the diffusion pump heater to cool to the new temperature.) Although maximum guaranteed sensitivity is 4×10^{-10} std cc/sec, it is usually more convenient to operate at 2×10^{-9} std cc/sec sensitivity because this allows direct-reading in std cc/sec on all ranges of the LEAK RATE meter. Moreover, it is sufficient for most applications. Usually the SENSITIVITY control will have to be about 1/3 turn away from HIGH to permit this direct-reading condition.

Maximum tolerable test pressure is increased by turning the SENSITIVITY control toward LOW. At LOW, this is about 200 millitorr. At HIGH, it is about 50 millitorr.

6-9 ELECTRICAL AND ELECTRONIC ADJUSTMENTS

6-9.1 ION SOURCE VOLTAGES

General: It is sometimes important to know if the ion source tuning voltages have sufficient span or are in the correct range. A simple procedure and comparison with this table will yield the answers.

1. Set the ION, REPELLER and FOCUS VOLTAGE knobs fully counterclockwise (CCW).
2. Measure each T.P. in numerical order, leaving the control in its CW position before proceeding with next measurement. All measurements are positive with respect to ground (TP 4 on front panel). Use a meter with at least 100,000 ohms/volt impedance.

TP1	Ion	CCW = 160 Volts CW = 330 Volts	All Voltages ±10%
TP2	Repeller	CCW = 330 Volts CW = 430 Volts	
TP3	Focus	CCW = 310 Volts CW = 250 Volts	

6-9.2 ADJUSTING THE THERMOCOUPLE GAUGE CIRCUITS

General: This procedure should be followed if a new 531 thermocouple gauge is installed, or if either the Gross Leak transfer point or the Test transfer point are found to have drifted. The leak detector should be operating with the diffusion pump and electronics on and the thermocouple gauge connected.

1. Open the top door to gain access to the P-C cards.
2. With the PUMPING MODE switch in OPERATE, the GROSS LEAK switch OFF and the TRANSFER PRESSURE set at HOLD, place the START/VENT switch in START. When the machine is pumped down as far as it will go, adjust R110 until the TEST PORT PRESSURE meter reads 5 millitorr. R110 is on the larger (Power Supply and Emission Regulator) P-C board and is accessible through a hole in the lower left quadrant of the smaller board.
3. Now set the TRANSFER PRESSURE knob at 10 millitorr. Adjust R237 until transfer takes place.
4. Cycle the START/VENT switch several times and make further adjustment to R237 as necessary to assure that transfer takes place at 10 millitorr.
5. Set TRANSFER PRESSURE knob to HOLD. If TEST lamp stays on, readjust R237 slightly counter-clockwise until TEST lamp goes off.
6. Locate A203 on the smaller P-C card. Short together pins 4 and 5 of A203, and adjust R230 until relay K202 actuates. Swing R230 back and forth between relay "in" and "out," and leave it set half-way between. Remove the short between pins 4 and 5.
7. Turn R224 fully clockwise. Turn on the GROSS LEAK switch and turn off the filament.
8. Move the START/VENT switch to VENT; then to START. The GROSS LEAK and REJECT lamps will be lighted.
9. Adjust R224 so that the REJECT lamp goes out as the TEST PORT PRESSURE meter indicates 700 (±100) millitorr. This adjustment is easiest if a Tuning Leak or other easily adjusted bleed valve is installed in the test port, and adjusted to yield a test port pressure of 700(±100) millitorr.
10. This adjustment completes the procedure. Turn on the filaments, close the upper door, check the sensitivity and proceed with use of the leak detector.

6-9.3 OVERPRESSURE PROTECTION ADJUSTMENT

Parts: 12 Megohm Resistor, 1/8 watt (min.)

1. Turn off the ELECTRONICS circuit breaker.
2. Remove the right-hand side panel.
3. Remove high voltage lead from the spectrometer tube and connect a 10-megohm resistor from it to ground (TP4).
4. Keeping away from the exposed high voltage, turn on the electronics. The SPECTROMETER TUBE PRESSURE meter should be reading about 0.25 millitorr (just above green band).
5. Open the upper door, exposing the P-C cards.
6. Locate and adjust R209 (lower center of smaller P-C card) just until relay K201 drops out and the filaments turn off. This is the correct setting. Make small adjustments and wait 5 seconds.
7. Turn off the electronics, close the upper door, replace the high voltage lead on the spectrometer tube, replace the side panel, turn on the electronics and proceed to check sensitivity and use the leak detector.

6-9.4 METER AMPLIFIER INSTALLATION AND ADJUSTMENT

The meter amplifier (A204) is a low-offset operational amplifier of good reliability. If it needs rezeroing, turn off ELECTRONICS and start at step 5. If it needs replacement:

1. Turn off the ELECTRONICS circuit breaker.
2. Open upper door to expose P-C cards.
3. Remove A204 (upper right corner of smaller P-C card).
4. Cut leads of new 540J to 3/8" length and plug it in, noting the orientation guide shown in the etch and on the socket.
5. Set Range Selector switch fully CCW, and CALIBRATE knob fully clockwise.
6. Unplug connector P/J208 and place clip-lead or other short across pins 2 and 8 (on P-C card), shorting the inputs of A204.
7. Turn on ELECTRONICS circuit breaker. Cycle the START/VENT switch to RESET and START.
8. When the TEST lamp lights, adjust R231 to bring the LEAK RATE meter reading as close as possible to zero.
9. Turn off the ELECTRONICS circuit breaker. Remove the clip-lead and reconnect P/J208. Close the upper door.
10. Turn on the ELECTRONICS and cycle the leak detector to TEST.
11. Set ZERO knob on Leak Indicator Panel approximately 5 turns from either end.
12. Re-zero LEAK RATE meter, using COARSE ZERO knob on Control Panel. Pointer on this knob should now lie between "9 o'clock" and "3 o'clock." If it does not, readjust R231.

6-9.5 ADJUSTMENT OF SPAN CONTROL

General: This adjustment should need attention only if components on the audible alarm P-C card are replaced. This card is part of the optional audible alarm and is located in the Leak Indicator chassis.

1. Open upper door, disconnect P/J603 at the back of the Leak Indicator chassis.
2. Lift the chassis out, invert it and remove the four screws securing the cover. Remove the cover.
3. Replace the chassis on the leak detector and reconnect P/J603.
4. Cycle the leak detector to test, with TEST lamp lighted. Obtain a full-scale deflection of the LEAK RATE meter. (Use ZERO knob on Leak Indicator Panel, with range selector on most sensitive scale.)
5. Turn the THRESHOLD knob fully counterclockwise and VOLUME fully clockwise. Adjust R303 (span control) on the PC Card until sound disappears, then reverse direction 1/8 turn to restore sound at highest possible pitch.
6. Retracing steps 3, 2 and 1, replace the Leak Indicator cover and place the leak detector back in service.

6-9.6 FORELINE PRESSURE SWITCH ADJUSTMENT

1. Turn off the DIFFUSION PUMP and ROUGH PUMP circuit breakers and turn the PUMPING MODE switch to SERVICE PUMP.
2. Unplug the cable from the 531 thermocouple gauge at the valve block and reroute it to the 531 thermocouple gauge at the foreline.
3. Remove the cover of the foreline pressure switch.
4. Unplug the pressure switch cord from the junction box and hook up an ohmmeter or circuit-tracing lamp to the two outer blades of the plug.
5. When the diffusion pump has been off for 20 minutes, and with test port open, turn off the FOREPUMP circuit breaker. Vent the diffusion pump by turning PUMPING MODE switch from SERVICE PUMP to OPERATE twice.
6. The pressure switch should read open — infinite ohms. If not, back out the screw (1/4" wrench) until it does.
7. With PUMPING MODE switch in SERVICE PUMP, turn on the FOREPUMP circuit breaker. The switch should actuate when the TEST PORT PRESSURE meter needle has moved 1/16" ±1/32" from "ATM." If it actuates too soon, back the screw out; if it fails to actuate, advance the screw (away from the switch).
8. Repeat steps 5 and 7 until the correct setting is achieved. Make sure that the forepump achieves a good vacuum (around 20 millitorr or better).
9. Replace cover on foreline pressure switch and plug in its cord.
10. Turn on DIFFUSION PUMP and ROUGH PUMP circuit breakers.
11. Reroute thermocouple gauge cable back to the thermocouple gauge on the valve block.
12. When the diffusion pump has been on for 30 minutes, turn the PUMPING MODE switch to OPERATE and proceed to use the leak detector.

6-9.7 ADJUSTMENT OF PRESSURE LIMIT SWITCH SETTINGS ON OPTIONAL AIR COMPRESSOR

1. Turn pressure regulator fully clockwise to highest pressure setting.
2. SLOWLY release air through escape valve at bottom of filter bowl until compressor starts (turns counterclockwise as viewed from above, through filter bowl). Note turn-on and shut-off pressures. If these are not 70 psi and 90 psi respectively, adjust limit switches per instructions inside plastic cover of air compressor pressure switch.
3. Reset regulator to 70 psi.

6-9.8 ADJUSTMENT OF DIFFUSION PUMP MINIMUM POWER

General: This adjustment needs to be made only if (probably after cleaning and recharging the diffusion pump) normal sensitivity cannot be attained, despite full use of the CALIBRATE and SENSITIVITY controls, and continuous test port pressure of 150 millitorr or higher does not cause the spectrometer tube pressure indication to rise above the green band.

1. Install an AC voltmeter (on a scale above 120 volts) across the D.P. with the D.P. plugged in.
2. Warm up the D.P. as usual (LOW sensitivity) then turn the SENSITIVITY to HIGH and allow the machine to stabilize (approximately 10 minutes).
3. Measure the Maximum Tolerable Test Pressure (MSTTP) using a tuning leak or equivalent adjustable air inlet valve in the test port: With the valve closed, transfer to TEST. Slowly open the valve until the SPECTROMETER TUBE PRESSURE meter is at the top of the green band. Note the TEST PORT PRESSURE reading. (It may be necessary to increase TRANSFER PRESSURE setting to stay in TEST.)
4. With the turret upper door open, locate R402, an adjustment pot on the smallest P-C card, to the right of the REJECT LEVEL pot (viewed from behind the leak detector).
5. If the MTTP is below 80 millitorr, adjust R402 to increase the voltage by 5 volts. (See Step 9 for MTTP above 100 millitorr and Step 13 for MTTP between 80 and 100.)

NOTE

Turn pots SLOWLY and in SMALL STEPS. Turn only enough to make the necessary change. See note, Step 14.

(See Step 9 for MTTP above 100 millitorr and Step 13 for MTTP between 80 and 100.)

6. Turn the SENSITIVITY to LOW. Adjust R413 (the left-hand one) as necessary to just maximize the D.P. voltage. SLOWLY.
7. Turn the SENSITIVITY back to HIGH and readjust R402 as necessary to obtain the voltage chosen in Step 5. Repeat Steps 5 and 6 until no further adjustment is necessary. Leave SENSITIVITY at HIGH.
8. Let the machine run at the new settings for 10 minutes, then go back to step 3 and continue.
9. If the MTTP is above 100 millitorr, adjust R402 (the pot on the right, viewed from behind the machine) to decrease the voltage by 5 volts.

NOTE

Turn pots SLOWLY and in SMALL STEPS. Turn only enough to make the necessary change. See note, Step 14.

10. Turn the SENSITIVITY to LOW. Adjust R413 (the left-hand one) as necessary to just maximize the D.P. voltage. SLOWLY.
11. Turn the SENSITIVITY to HIGH, and readjust R402 as necessary to obtain the voltage chosen in Step 9. Repeat Steps 9 and 10 until no further adjustment is necessary. Leave the SENSITIVITY set at HIGH.
12. Let the machine run at the new settings for 10 minutes, then go back to Step 3 and continue.
13. When the MTTP is between 80 and 100 millitorr, the diffusion pump is performing correctly. At this setting, the sensitivity for one minor division should be 4×10^{-10} scc/sec and may be better. If the sensitivity is worse than 4×10^{-10} scc/sec (e.g., 6 or 8×10^{-10} scc/sec) refer to the trouble-shooting guide.

14. EXTRA NOTE: If adjustment of R402 or R413 causes the D.P. voltage to become high or low with **no control** by any pot, place both pots near the center of their range and **wait** 40 to 60 seconds for the circuit to recover. Then, with SENSITIVITY set at LOW, adjust R413 to maximize the D.P. voltage. Turn the SENSITIVITY to HIGH and go to Step 3 and continue.

6-10 LEAK CHECKING THE LEAK DETECTOR

Accuracy, reliability and stability of any mass spectrometer leak detector depends upon the leak-free integrity of its own vacuum system. Inherent helium background and its effect on sensitivity demands elimination of all detectable leaks. If performance degrades during operation or after some part of the vacuum system is opened, a methodical leak check will eliminate the possibility of a leak as the cause. Proceed as follows:

6-10.1 DETERMINE PROCEDURE BY LEAK SIZE

Classifying leaks by size determines which procedure will locate leaks most reliably in the shortest time. When using the 936 series leak detector, these classes are determined by TEST PORT pressure ranges as follows:

a. Above 700 millitorr (gross leak transfer point).
b. Between 700 millitorr and TRANSFER PRESSURE set point.
c. Below TRANSFER PRESSURE set point (normal TEST mode).

These procedures are given in paragraphs 6-10.3, 6-10.4 and 6-10.5.

6-10.2 GENERAL SUGGESTIONS

The following suggestions apply whether leak checking components, systems, or the leak detector itself.

1. When spraying suspected leak locations, always apply helium starting at the highest points first, since helium rises. If drafts, such as from a cooling blower, exist in the area, apply helium downstream from source first, or deflect draft until leak checks are completed.
2. If vent grooves exist at flanges or other assembled seals, apply helium to these points, (rather than a general spray), to obtain the most positive response, minimize use of helium and save time in checking.
3. Locate and repair large leaks (paragraph 6-10.3 and 6-10.4) before attempting to locate extremely small leaks.
4. Limit the search to a general area of test piece by isolation methods. Bagging, masking or shielding with tape, plastic film or duct seal (if applied properly) will shorten the time required to locate both large and small leaks.
5. Use only enough helium to reach the leaks. DON'T flood the area.

6-10.3 TEST PORT PRESSURE GREATER THAN 700 MILLITORR

Large leaks that prevent reduction of test port pressure meter readings below the 700 mT Gross Leak transfer point may be located by spraying with helium and listening for a rise in the frequency or tone of mechanical pump noise as helium enters the pump in large quantities.

6-10.4 TEST PORT PRESSURES BETWEEN 700 MILLITORR AND TRANSFER PRESSURE SET POINT

Leaks small enough to allow valve transfer into the GROSS LEAK test mode (less than 700 mT) will allow testing at a sensitivity less than in the normal TEST mode, using procedures described in paragraph 6-10.2.

6-10.5 TEST PORT PRESSURES LESS THAN TRANSFER PRESSURE SET POINT

Checking for leaks in the normal TEST mode allows location at full sensitivity. This emphasizes the need to follow paragraph 6-10.2 carefully to minimize false leak locations and the build-up of permeation through seal materials. Extended testing over a long period of time on parts or systems that have elastomer seals saturates these materials with helium, making accurate testing more difficult.

6-10.6 LEAK CHECKING THE 936-70 LEAK DETECTOR

6-10.6.1

With the leak detector in TEST mode, spray the following seals or joints in numerical order:

1. Test port and manifold to valve block.
2. Test valve, rough valve, vent valve, T/C gauge tube, built in calibrated leak valve (with valve open and closed) and valve block bottom cover plate.
3. Valve block to foreline manifold.
4. All spectrometer tube seals and service valve connections.
5. Pump valve flange and diffusion pump inlet flange.
6. Foreline connections at diffusion pump, forepump, foreline pressure switch, T/C gauge tube and gross leak valve.
7. Rough pump connections at valve block and pump.
8. Roughing side of gross leak valve.
9. Rectangular connection of built-in calibrated leak valve.

NOTE

It may be necessary to deflect airstream from diffusion pump blower when checking in above steps 4 through 9.

6-10.6.2

Leakage through Gross Leak valve can be checked only as follows:

1. Disconnect and pinch off air line to roughing valve to close this valve.
2. Disconnect roughing flange at bottom of valve block.
3. Insert helium into valve block opening.

VII. TROUBLESHOOTING

Careful maintenance will insure proper operation for your Varian 936 Mass Spectrometer Leak Detector, but occasionally a problem will arise. The following table lists the symptoms with appropriate corrective measures by number. See Table 7-1 on page 7-4 for actual corrective measures..

Symptoms are grouped according to where they are likely to occur on or in the leak detector.

In all cases, first verify that the 936 is plugged into a 110-volt, 60-Hz, 20-amp receptacle which is properly earth grounded (to water pipe). Verify that all plugs and connectors with the 936 are firmly seated (spectrometer tube, electronics cables, pumps and power supplies, etc.)

Proceed with the troubleshooting by locating the symptom below and executing the associated corrective measure. If you cannot find a corrective measure or the symptom persists despite attempts to correct it, call your nearest Varian service center or the Service Department at Lexington, MA, or Palo Alto, CA, for advice or service as appropriate. Describe symptoms clearly to facilitate prompt solution. See locations and telephone numbers following the index (before Section I).

Symptom	Corrective Measure No. (See Table 7-1)
PUMPS	
Roughing and Foreline Pumps:	
1. Pilot lamp stays on when circuit breaker is ON.	2
2. ON-OFF breaker switch does not stay on.	3
3. Pump motor runs, but pump does not turn over. (Belt is okay.)	4, 5
4. Pump emits a gurgling sound after pumping for a minute.	6, 7, 8
Diffusion Pump:	
1. Pilot lamp stays on.	2, 9, 10, 81
INDICATORS & CONTROLS	
Test Port Pressure Meter	
1. START/VENT switch in START; no meter movement and no sound of valve actuation.	11, 12, 76, 26
2. START/VENT switch in START; no meter movement but valve actuation is heard.	13, 21, 39

	Symptom	Corrective Measure No. (See Table 7-1)
3.	Pressure drops slowly and/or does not reach normal transfer point.	14, 20, 21
4.	Pressure low enough but transfer does not occur. (TEST lamp does not light.)	15, 16, 73
5.	START/VENT switch in VENT position but pressure does not go right up to "ATM."	76, 77
Spectrometer Tube Pressure Meter:		
1.	Needle does not drop into green band.	19, 33, 35, 49
2.	Meter does not indicate.	36, 37, 38, 39, 40
3.	Meter does not indicate in SERVICE PUMP mode.	78, 79
4.	Meter pegged full scale.	33, 38, 39, 40
5.	Meter fluctuates.	38, 43
6.	When pressure rises above green band, TEST lamp remains lighted.	24, 72
7.	Pressure rises when START/VENT switch is set in START.	18, 82
8.	Pressure rises above green band when TEST lamp lights.	20, 23
9.	Pressure rises above green band when test port is vented.	85
Leak Rate Meter:		
1.	No sensitivity to helium. (TEST lamp lighted; meter responds to ZERO adjustment.)	62, 55, 42
2.	Low sensitivity to helium. (TEST lamp lighted.)	55, 61, 62, 66
3.	Unusually high sensitivity to helium.	46, 53, 62, 86
4.	High helium background.	33, 38, 52
5.	Meter does not indicate. (TEST lamp is lighted.)	39, 40, 41, 42, 55
6.	Meter reads full scale with range selector switch in last clockwise position.	33, 50, 53
7.	Meter pegged below zero point (despite ZERO and COARSE ZERO adjustments).	27, 39, 40
8.	Meter very unstable.	50, 53
9.	Meter fluctuates slightly.	28, 50
10.	Meter drifts upscale.	52
11.	Meter insensitive to ZERO control with TEST lamp on.	45, 57
12.	Leak rate indication does not agree between scales.	29, 54

Symptom	Corrective Measure No. (See Table 7-1)
Emission Meter:	
1. Meter does not indicate.	56, 39, 40, 48, 63, 64
2. Meter is pegged positive (above 10)	63, 64
3. Meter fluctuates.	63, 66
4. Meter does not reach approximately 8 when EMISSION adjustment is fully clockwise.	63, 64, 66
Leak Indicator Panel:	
1. No audible signal (meter deflection is present). (Audible alarm option present.)	51
2. Audio threshold cannot be set.	65
3. REJECT lamp does not light.	1, 68
4. TEST lamp does not light (filament on and transfer or GROSS LEAK test completed)	1, 69, 70
5. GROSS LEAK lamp does not light (GROSS LEAK switch on, pressure is between 700 millitorr and TRANSFER PRESSURE setting).	1, 71, 72
6. FIL OFF lamp stays on.	48, 56, 63, 64, 70
7. FIL ON indicator does not light.	1, 48, 56, 63, 64, 70
Tuning Controls:	
1. Low or no voltage at TP1.	55, 47, 58
2. Low or no voltage at TP2.	55, 57, 59
3. Low or no voltage at TP3.	55, 57, 60
4. No COARSE ZERO or ZERO control.	57, 83
Electronics:	
1. ON-OFF breaker switch does not stay on.	67
Orifice (-65 only)	
1. Orifice does not open.	30, 31
2. Orifice ratio is greater or less than specified.	32
MISCELLANEOUS	
Compressor does not shut off.	74, 75
In SERVICE VENT mode, TEST PORT PRESSURE meter indication does not quickly rise to "ATM."	35, 80
In SERVICE PUMP mode, TEST PORT PRESSURE meter does not move.	26
Solenoid valve chatters.	86
Leak indicator panel vibrates.	87

TABLE 7-1
CORRECTIVE MEASURES

No.	Corrective Measures
1.	Check for burned out lamp and replace as necessary.
2.	Check for open power circuit and correct.
3.	Check for shorted or overloaded power circuit and correct.
4.	Mechanical pumps tend to stick when they are cold. If the motor is running, but the pump is not turning over, shut off pump switch. Turn pump over by hand a few times counterclockwise, facing pump from open door on cabinet. Turn on, and watch to see that pump turns over. Repeat procedure if necessary.
5.	A belt adjustment may be necessary. Check paragraphs 6-3.2 and 6-5.2. (Note: For 936-70, paragraph 6-3.1)
6.	Check for large leak in system as evidenced by a pump that is gurgling.
7.	Check oil level in pump. Fill pump to level between two lines on sight glass.
8.	Check that all ports are plugged. Check that cold trap is seated properly. (-60 & -65)
9.	The diffusion pump is protected by a pressure switch located on the foreline manifold. This pressure switch may be out of adjustment. See paragraph 6-9.6. Additional protection is provided by a vane switch in the air duct (behind the filter). Be sure the vane pulls forward with blower on.
10.	Check for poor connection in wiring to diffusion pump heater or defective diffusion pump heater. Repair or replace as necessary.
11.	Control power fuse (1 amp) is blown.
12.	No compressed air.
13.	Thermocouple gauge defective.
14.	Roughing pump oil low or contaminated.
15.	Verify that the filament is on and emission is present.
16.	Adjust TRANSFER PRESSURE to higher setting. Note: If TRANSFER PRESSURE does not agree with meter reading, see paragraph 6-9.2.
17.	Leak in test valve.
18.	Leak in gross leak valve.
19.	Check cold trap for sufficient liquid nitrogen. (-60, -65)
20.	Check for leak in roughing system or test port assembly.
21.	Check for defective mechanical pump or for a broken belt. Repair or replace as necessary.
22.	Leak in service valve (-70 only).
23.	TRANSFER PRESSURE set too high.
24.	Adjust overpressure protection potentiometer. Refer to Section 6-9.3.

TABLE 7-1
CORRECTIVE MEASURES

No. **Corrective Measures**

25. Turn REPELLER down. If no change, go to Measure 27. If meter moves downscale, then contamination of spectrometer tube or large leak is probable.

26. Rough valve solenoid-operated air valve stuck closed.

27. Check that preamplifier is plugged in; check voltages at preamplifier plug (see Figure 7-1), then replace meter amplifier (A204). (See Section 6-9.4 for installation.) If problem persists, preamplifier must be replaced.

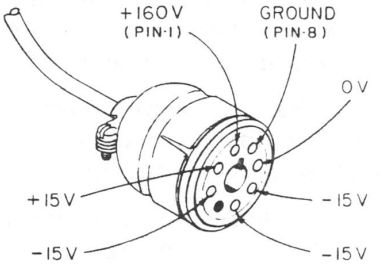

Figure 7-1

28. Rotate REPELLER VOLTAGE control fully counterclockwise. If instability decreases, trouble is contamination or leaking in the vacuum system. If instability remains the same, trouble is in the electronics. Turn up REPELLER and check voltages at TP1, 2 and 3 for instability.

29. Check ZERO setting of meter amplifier (see Section 6-9.4).

30. Check for sticking of orifice plate. Remove and wipe clean. (-65)

31. Check for defective orifice solenoid or misaligned orifice magnet. Slot on magnet must be in a vertical position. (-65)

32. Check for bent orifice plate. It should fit flat against holding ring. (-65)

33. Check for leak. Refer to paragraph 6-10.

34. Check for meter movement using ZERO adjustment.

35. Vent valve defective.

36. Check for good contact of high voltage cable on cold cathode gauge. It may be necessary to cut off about 1/2" to insure contact because the wire may be stuffed up in insulator.

WARNING

Before cutting high voltage cable, turn off electronics circuit breaker.

---

37. Check for defective high voltage power supply. Check for approximately 2000 vdc with proper meter. (Red cable to ground.)

38. Dirty or defective cold cathode gauge. Check Figure 6-29 (936-70) or Figure 6-30 (936-60, 65).

39. Check for defective meter, and repair or replace as necessary.

40. Sticking meter. Tap lightly with finger.

41. Check for open circuit to leak rate meter and correct.

42. Standard leak void of helium (extremely rare).

43. Check for leak in or near spectrometer tube.

No.	Corrective Measures
45.	Try to zero meter with COARSE ZERO.
46.	Sensitivity control set too high (-70).
47.	Check zeners on power supply and emission regulator board (CR 107, 108, 110, 113, 114).
48.	Ascertain that spectrometer tube pressure is in the green band, D.P. OFF lamp is not lighted, PUMPING MODE switch is in OPERATE position, FILAMENT ON/AUTO RESET/OFF switch is in AUTO RESET position and that EMISSION adjustment is mid-range.
49.	Check that pump valve is open: cycle PUMPING MODE switch to SERVICE PUMP mode, feeling the bleed hole in the pump valve actuator for suction indicating closure. Switch to OPERATE and feel for air coming out bleed hole, indicating that the valve is opening.
50.	Check for loose or poor connector contact at preamplifier and at Amplifier and Set Point card (P/J208). Try pressing lightly on each of these to see if better contact can be made. Repair is necessary.
51.	Check for open speaker.
52.	Standard leak does not shut off completely.
53.	Check for open circuit in amplifier, preamp, or associated cabling.
54.	Check for meter mechanical zero out of adjustment. Turn off ELECTRONICS circuit breaker and adjust meter to zero, using screwdriver adjustment located on meter.
55.	Check for a shorted ion source: While monitoring test point voltages per paragraph 6-9.1, unplug the ion source. If voltage changes, replace ion source.
56.	Check for burned out filament. Switch to other filament. If both filaments are burned out replace ion source (see paragraph 6-7.1).
57.	Check for defective relay in electronics (K205).
58.	Check for defective ion potentiometer.
59.	Check for defective repeller potentiometer.
60.	Check for defective focus potentiometer.
61.	Check for misalignment of ion source in spectrometer tube. See Figure 6-29 (936-60,65) or Figure 6-28 (936-70).
62.	Try retuning leak detector; readjust calibration to match standard leak.
63.	Check for defective emission regulator (CR601): With ELECTRONICS off, disconnect P/J116 at Power Supply and Emission Regulator board. Measure resistance between pins of the *cable*. Values should be: Pins 1-2: greater than 10,000 ohms; Pins 2-3: between 30 and 100 ohms; Pins 3-1: greater than 10,000 ohms.
64.	Check for defective emission potentiometer circuit.
65.	Check THRESHOLD control.
66.	Check for defective ion source.

No.	Corrective Measures
67.	Check for short circuit: Remove connectors P/J 126 and P/J 136 from the Power Supply and Emission Regulator board. Try the circuit breaker again. If it stays on, the problem is on the P-C cards. If it still drops out, disconnect the A.C. connector at the back of the Preamplifier Power Supply (small aluminum box within the lower cabinet) and try the circuit breaker again. If the problem persists the cause is probably a shorted primary in the high voltage transformer or the power transformer.
68.	Defective relay (K203).
69.	Defective relay (K601) in subchassis.
70.	Defective relay (K101) on board.
71.	Defective relay (K202) on board.
72.	Defective relay (K201) on board.
73.	Defective relay (K204) on board.
74.	Compressor will not achieve 85 psi.
75.	Pressure switch needs adjustment or replacement.
76.	Defective START/VENT switch.
77.	Test valve solenoid-operated air valve stuck open. (Location: Under stainless top on right-hand rail. Front unit.)
78.	High voltage lead disconnected from spectrometer tube.
79.	Service Valve does not open. (-70 only)
80.	Pump valve solenoid-operated air valve stuck open (location: under stainless top, on right-hand rail. Back unit).
81.	Check that blower is plugged in and operating.
82.	Leak in Service Valve. (-70 only)
83.	Check for defective ZERO or COARSE ZERO potentiometer.
84.	Diffusion pump fluid is low (see paragraph 6-7.4).
85.	Test valve actuator needs lubrication. See paragraph 6-7.5.
86.	Replace solenoid.
87.	Remove shipping bolts from mechanical pumps.
88	filter mail

SECTION VIII. SCHEMATICS & PARTS LISTS

This section includes schematics of the electrical and electronic systems as well as lists of replacement parts keyed to photographs and drawings. The Varian ordering numbers of all parts are listed, with the exception of O-rings, which are available only in kit form, and items available in hardware stores.

Note that pictures and parts lists of all three models are present; be sure to refer to the correct ones for your needs.

ASSOCIATED W/936-60, FRONT VIEW

Item	Description	Varian Ordering Number
1	Diffusion Pump (see Figure 8-15)	0981-K3026-301
2	Bonnet & Trim Assembly (see Figure 8-14)	0981-K3035-301
3	Valve Block (see Figure 8-13)	0981-K3032-301
4	Leak Indicator w/Optional Audible Alarm	0981-K3313-301
	Leak Indicator w/o Audible Alarm	0981-K3300-301
5	Time Delay Assembly	0981-K6982-301
6	Valve Manifold Assembly L1, L2, L3	0981-K3383-001
7	Power Supply, Preamplifier	0981-K4055-301
8	Spectrometer Tube (see Figures 8-10, 8-11)	0981-K3021-301
9	Roughing Manifold (for 1402B)	0981-K3086-301
	Roughing Manifold (for 1376B)	0981-K3340-301
10	Filter-Regulator-Lubricator	0981-K3330-301
11	Mechanical Vacuum Pump, Welch 1402B (5.6 cfm)	4530-1402B-000
	Mechanical Vacuum Pump, Welch 1376B (10.6 cfm)	4530-1376B-001
12	Start/Vent Switch Assembly (not shown)	0981-K4301-301

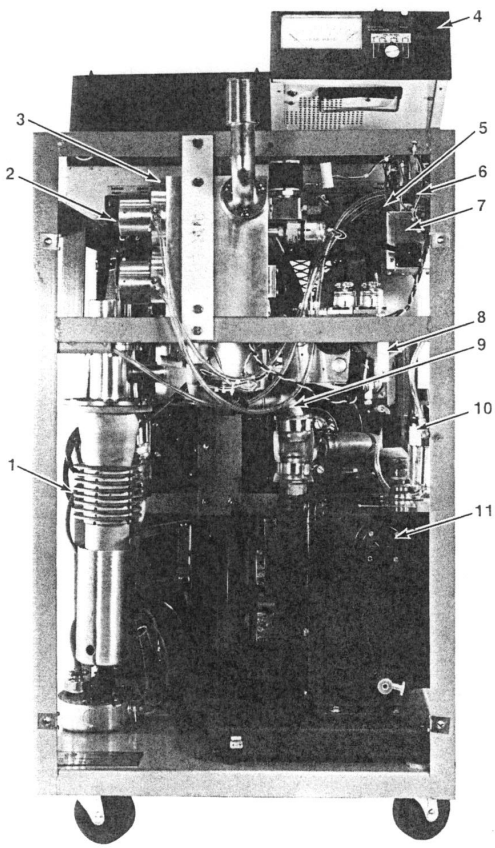

Figure 8-1. 936-60, Front View

ASSOCIATED W/936-60, SIDE VIEW

Item	Description	Varian Ordering Number
1	Blower	0981-K3041-301
2	Vane Switch	0981-K3372-301
3	Mechanical Vacuum (Fore) Pump, Welch 1400B	4530-1400B-002
4	Air Compressor only	0981-6591-09-005
	Compressed Air Tank only	0981-K3394-001
	Air Compressor/Tank/Switch/Assembly	0981-K3393-301
5	Electronics Assembly, w/o Leak Indicator	0981-3042-301
6	Cold Trap Insert	0981-83485-301
7	Cold Trap Housing Assembly (O-Ring: Parker 2-256) *	0981-K3020-301
8	Foreline Manifold	0981-K3091-301
9	Vacuum Switch, Foreline	0981-K3092-301
	Filter, Cooling Air (not shown)	
	(Standard Furnace filter 10" x 20" x 1")	

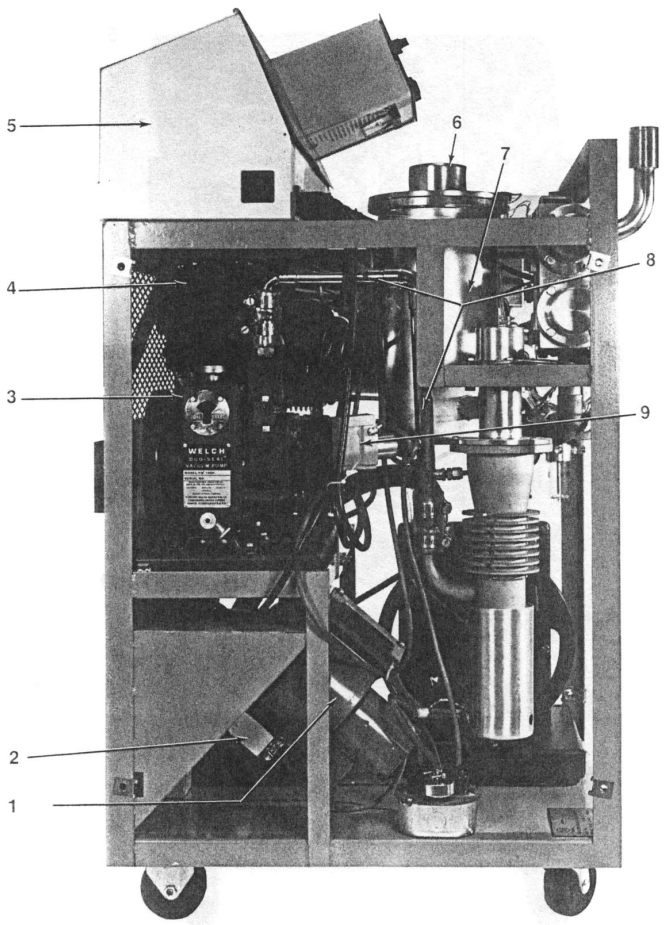

Figure 8-2. 936-60, Side View

* Included in O-ring kit, 0981-K4372-801.

ASSOCIATED W/936-70, FRONT VIEW

Item	Description	Varian Ordering Number
1	Diffusion Pump (see Figure 8-15)	0981-K3026-301
2	Pump Valve Assembly	0981-K3365-301
3	Bonnet & Trim Assembly (see Figure 8-14)	0981-K3035-301
4	Valve Block (see Figure 8-13)	0981-K3032-301
5	Leak Indicator w/Optional Audible Alarm	0981-K3313-301
	Leak Indicator w/o Audible Alarm	0981-K3300-301
6	Power Supply, Preamplifier	0981-K4055-301
7	Spectrometer Tube (see Figures 8-10, 8-11)	0981-K3021-301
8	Roughing Manifold (for 1402B)	0981-K3086-301
	Roughing Manifold (for 1376B)	0981-K3340-301
9	Filter-Regulator-Lubricator	0981-K3330-301
10	Mechanical Vacuum Pump, Welch 1402B (5.6 cfm)	4530-1402B-000
	Mechanical Vacuum Pump, Welch 1376B (10.6 cfm)	4530-1376B-001
11	Start/Vent Switch Assembly (not shown)	0981-K4301-301

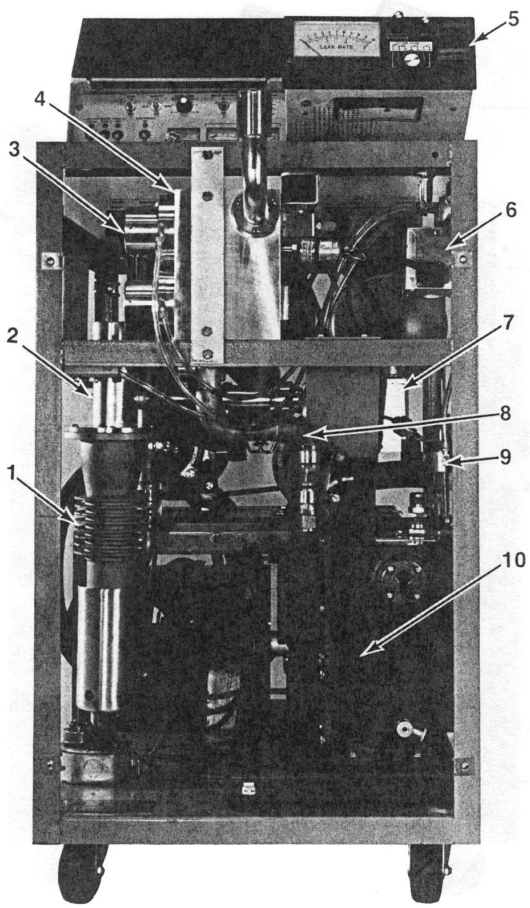

Figure 8-3. 936-70, Front View

CONTROL PANEL

Item	Description	Schematic Symbol	Varian Ordering Number
1	Switch Toggle, SPDT	S605	0981-6421-04-006
2	Switch Toggle, DPDT 3-position	S601	0981-6421-02-012
3	Potentiometer, 100K ohm	R609	0981-6545-12-004
4	Switch Toggle, SPST	S611	0981-6421-02-025
5	Potentiometer, 100K ohm	R612	0981-6545-12-001
6	Circuit Breaker, 12.5 A.	CB601	0981-6431-28-538
	Circuit Breaker, 25A (10.6 cfm pump)	CB601	0981-6431-28-540
7	Circuit Breaker, 10 A.	CB602	0981-6431-28-533
8	Circuit Breaker, 7 A.	CB603	0981-6431-28-530
9	Circuit Breaker, .75 A.	CB604	0981-6431-28-536
10	Meter, Emission	M602	0981-F5251-001
11	Meter, Spec. Tube Press.	M603	0981-K3389-001
12	Meter, Test Port Press.	M601	0981-6522-08-125
13	Switch, Rotary 8-pole, 3-position	S603	0981-6421-09-015
14	Switch, Toggle, DPDT	S602	0981-6421-02-015
15	Potentiometer, 10K ohm	R605	0981-6545-12-003
16	Potentiometer, 2.5K ohm	R606	0981-6545-12-020
17	Potentiometer, 1K ohm	R604	0981-6545-12-086
18	Potentiometer, 10 turn, 100K ohm	R601	0981-6545-12-045
19	Potentiometer, 150K ohm	R603	0981-6545-12-030
20	Potentiometer, 150K ohm	R602	0981-6545-12-030

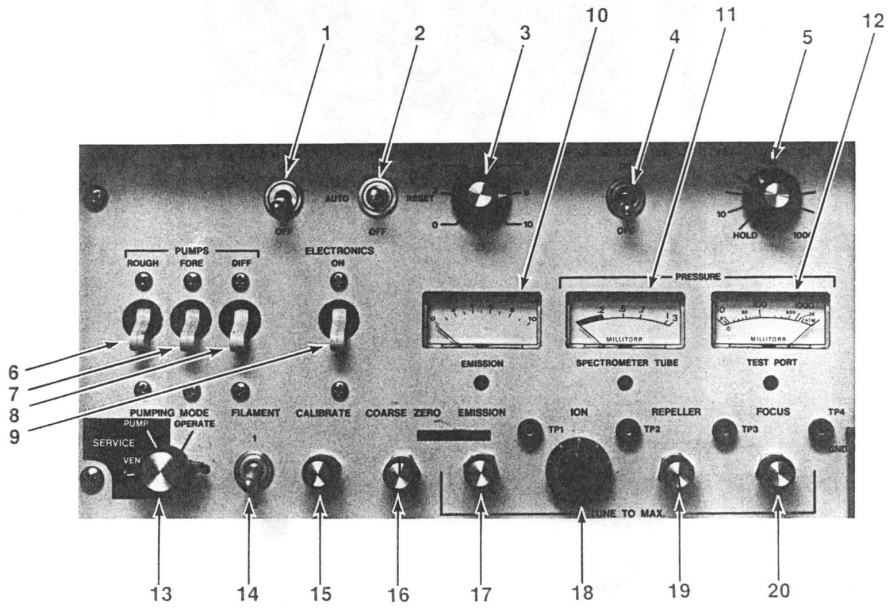

Figure 8-5. Control Panel

ASSOCIATED W/936-70, SIDE VIEW

Item	Description	Varian Ordering Number
1	Blower	0981-K3041-301
2	Vane Switch	0981-K3372-301
3	Mechanical Vacuum Pump, Welch 1400B	4530-1400B-002
4	Air Compressor only	0981-6591-09-005
5	Compressed Air Tank only	0981-K3394-001
	Air Compressor/Tank/Switch/Assembly	0981-K3393-301
6	Electronics Assembly, w/o Leak Indicator	0981-K3042-301
7	Valve Manifold Assembly L1, L2, L3	0981-K3383-001
8	Time Delay Assembly	0981-K6982-301
9	Foreline	0981-K3018-301
10	Vacuum Switch, Foreline	0981-K3092-301

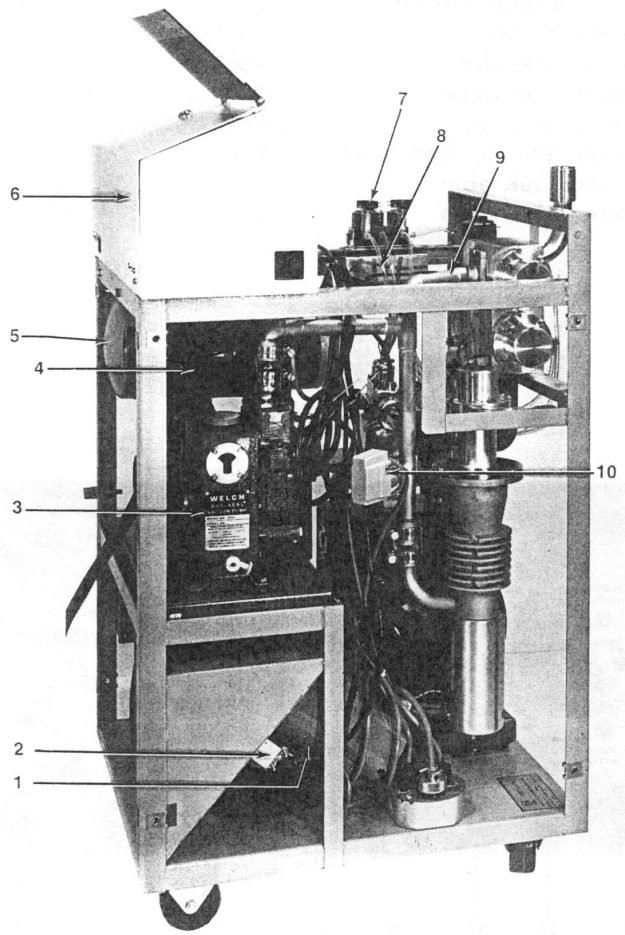

Figure 8-4. 936-70, Side View

UPPER CABINET, REAR VIEW

Item	Description	Varian Ordering Number
1	Sub-Chassis, Power Control (see Figure 8-7)	0981-K3083-301
2	Circuit Board, Amplifier & Set Points	0981-K3066-301
3	Circuit Board, Power Supplies & Emission Regulator	0981-K3050-301
4	P-C Board Mount	0981-K3082-301
5	Relay (2), Current Sensing (Mechanical Pumps) (K611) (K612)	0981-6570-08-133
6	Relay, Current Sensing (Diffusion Pump) (K613)	0981-6570-08-135
7	Fuse, 1 Amp 3AG SLO-BLO (XF60)	0981-6453-00-022
8	Fuse, 5 Amp 3AG SLO-BLO (XF60)	0981-6453-00-005
	Potentiometer 2.5K ohm (R613) (not shown)	0981-6545-12-020
9	Circuit Board, Diffusion Pump Constant Power Control (936-70 only) (not shown; behind item 3)	0981-K4473-301

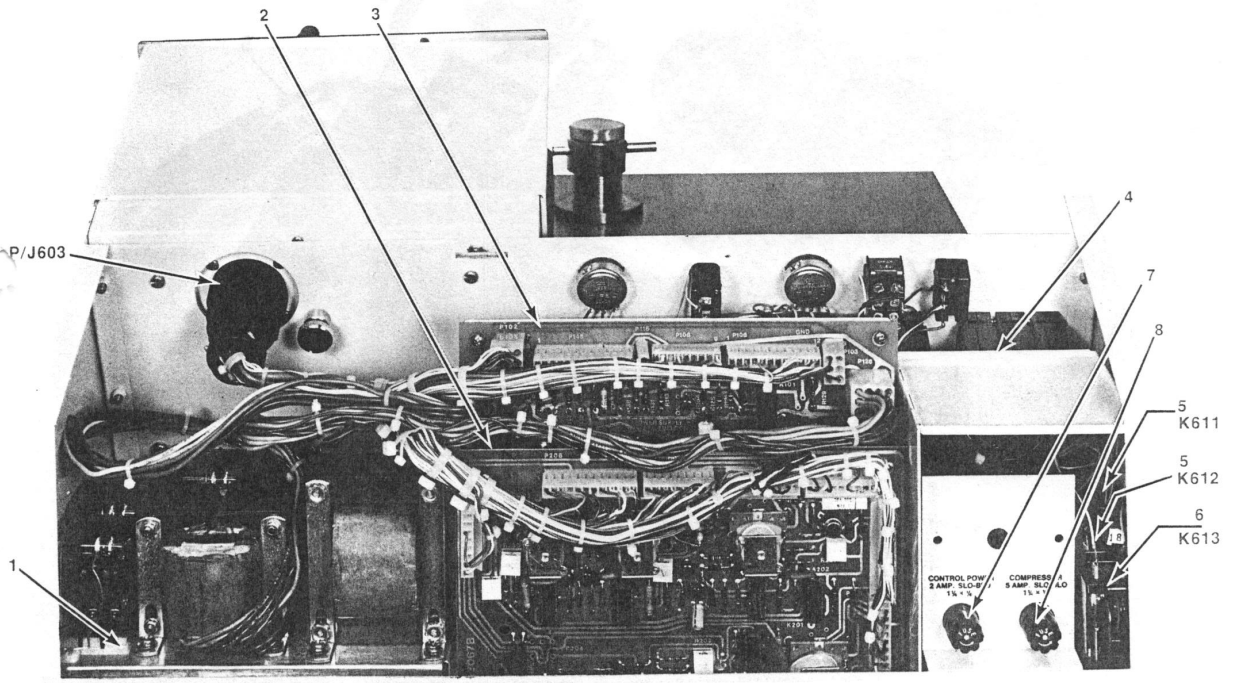

Figure 8-6. Upper Cabinet, Rear View

SUBCHASSIS, POWER CONTROL
0981-K3083-301

Item	Description	Schematic Symbol	Varian Ordering Number
1	Relay, Magnecraft W388ACPX13		0981-6570-08-138
2	Transformer, Power	T601	0981-K3056-001
3	Transformer, High Voltage	T602	0981-6581-00-244
4	Triac, Emission Control (RCA 2N5573)	CR601	0981-6543-18-063
5	Transformer, Control	T603	0981-6582-00-139
	High Voltage P.C. Card (not shown)		0981-K3053-301

zwart 2
wit 3
rt/blauw 4
rt/wit 5
groen 28

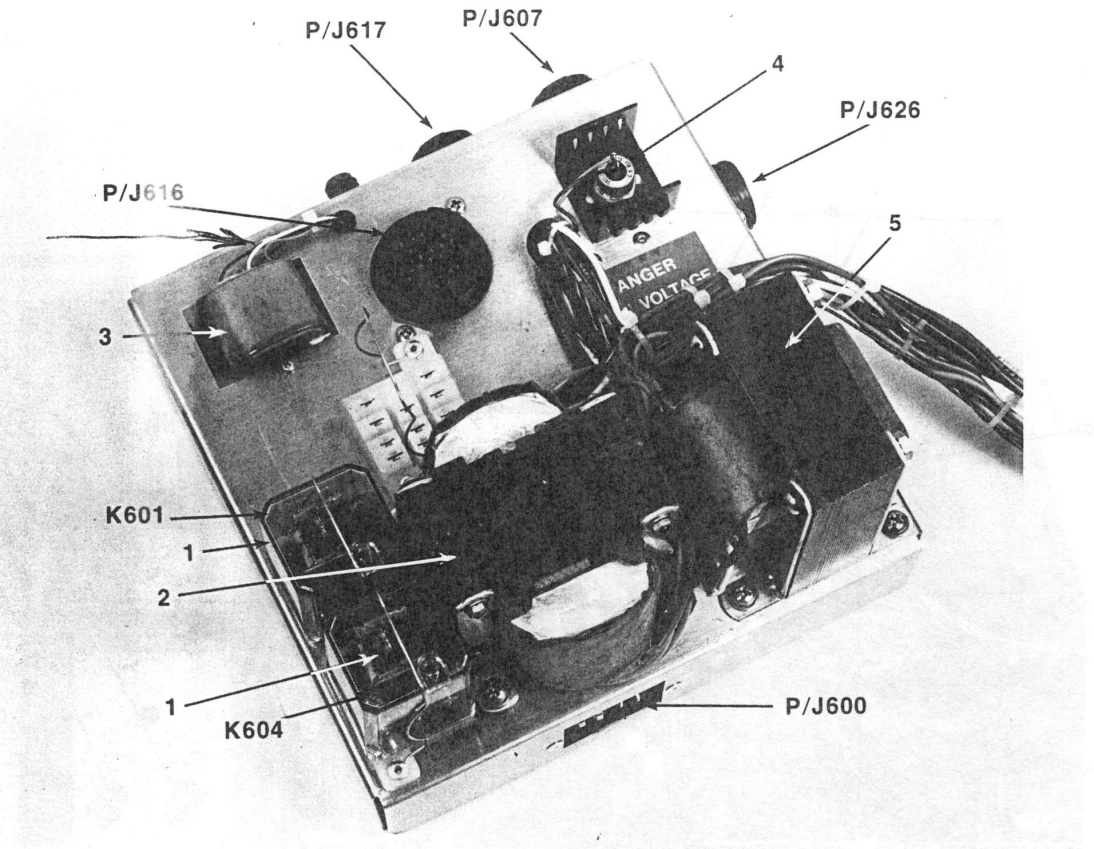

Figure 8-7. Subchassis, Power Control

LEAK INDICATOR PANEL

Item	Description	Schematic Symbol	Varian Ordering Number
1	Meter, Taut Band, 1 mA movement	M321	0981-K3307-301
2	Potentiometer, Concentric, 100K 2.5K	R323/322	0981-6545-09-135
3	Potentiometer, 10 Turn, 1K ohm	R321	0981-6545-12-040
4	Lamp, GROSS LEAK		0981-6510-02-105
5	Lamp, REJECT		0981-6510-02-110
6	Lamp, TEST		0981-6510-02-115
7	Lamp, RP OFF		0981-6510-02-120
8	Lamp, FP OFF		0981-6510-02-125
9	Lamp, DP OFF		0981-6510-02-130
10	Lamp, FIL OFF		0981-6510-02-135
11	Lamp, Indicator, Shelly #BEP BA07GLP		0981-6510-25-070
12	Switch — 7 position	S321	0981-6421-09-005

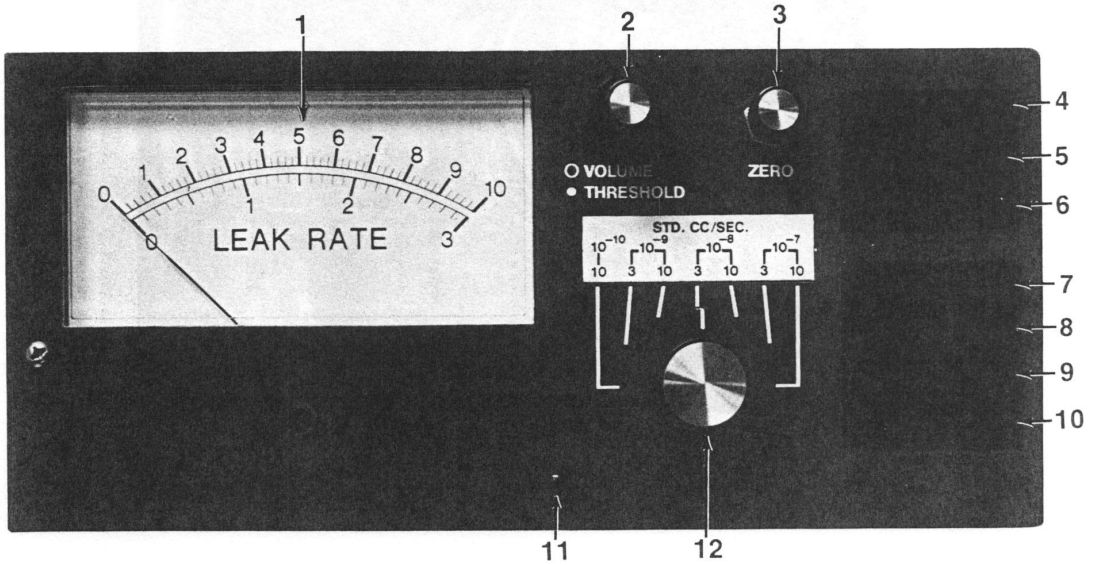

Figure 8-8. Leak Indicator Panel

LEAK INDICATOR
0981-3300-301 (VISUAL ONLY)
0981-3313-301 (AUDIO-VISUAL)

Item	Description	Schematic Symbol	Varian Ordering Number
1	Jack	J320	0981-6480-73-094
2	Speaker		0981-6700-09-925
3	Audible Alarm Circuit Board		0981-K3308-301

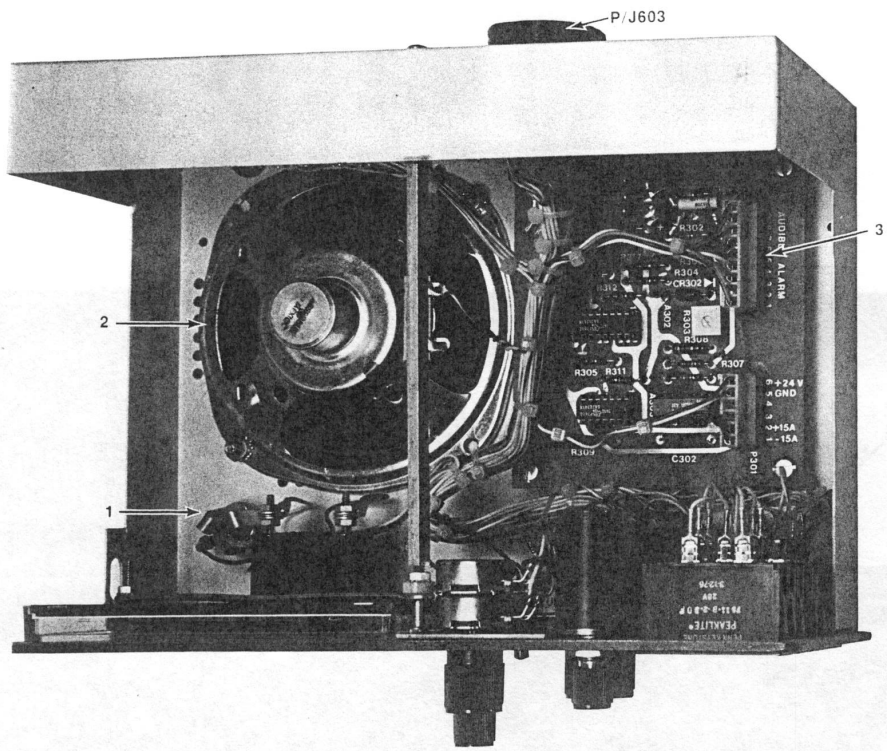

Figure 8-9. Leak Indicator, Top View

SPECTROMETER TUBE
0981-K3021-301
(Includes Magnet Assembly Shown on Next Page)

Item	Description	Varian Ordering Number
1	Compression Cap	0981-82847-301
2	O-ring Follower	0981-82848-001
3	O-ring, Parker 2-216, Buna-N	*
4	Cold Cathode Gauge (see Figure 8-12)	0981-82849-301
5	Ion Source	0981-82850-301
6	Clamp	0981-82852-001
7	O-ring, Parker 2-025, Buna N (3)	*
8	Pre-amplifier	0981-K3333-301
9	Cathode Liner	0981-82849-008
10	Ground Plate	0981-K3088-001
	Baffle (not shown)	0981-83834-001
	Screws (not shown) #8-32x1/2" long, fillister head (10)	

*Furnished in O-ring Kit, 0981-K4372-801.

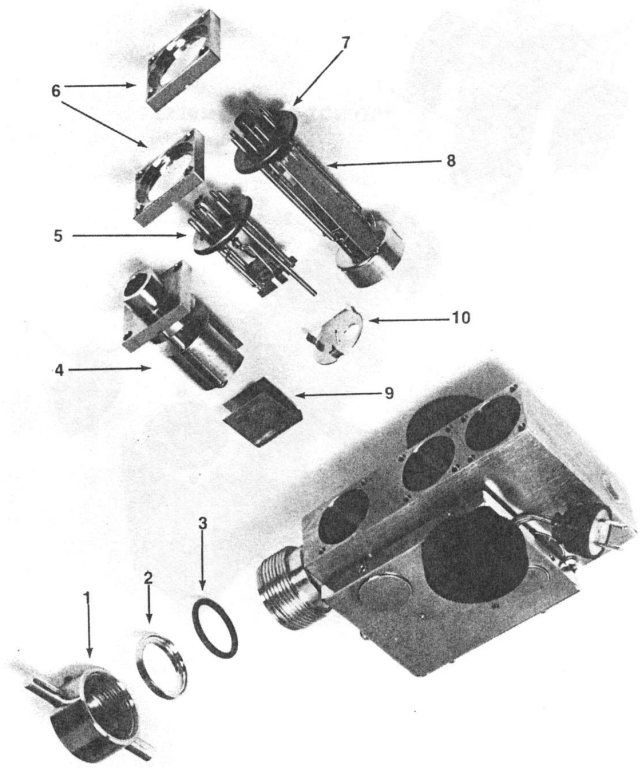

Figure 8-10. Spectrometer Tube

SPECTROMETER TUBE AND MAGNET ASSEMBLY

Item	Description	Varian Ordering Number
1	Magnet Assembly	0981-K3023-301
2	Spectrometer Tube Body	0981-K3022-301
3	O-ring, Parker 2-025, Buna N(2)	*
4	Deflection Pole Piece	0981-K3093-001
5	Heater, 110 Volts	0981-K3057-301
	Heater, 220 Volts	0981-K3057-302
	Screws (not shown) #8-32x1/4" long, Pan head (11)	

*Furnished in O-ring Kit, 0981-K4372-801.

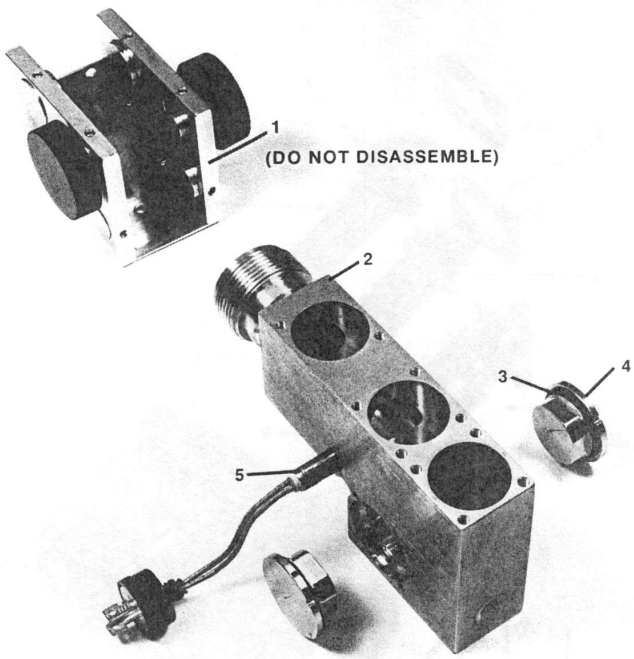

Figure 8-11. Spectrometer Tube and Magnet Assembly

COLD CATHODE GAUGE
0981-82849-301

Item	Description	Varian Ordering Number
1	O-Ring, Parker No. 2-025, Buna-N	*
2	Cathode Liner	0981-82849-008
3	Ceramic Shield	0981-6480-45-015

*Furnished in O-Ring Kit, 0981-K4372-801.

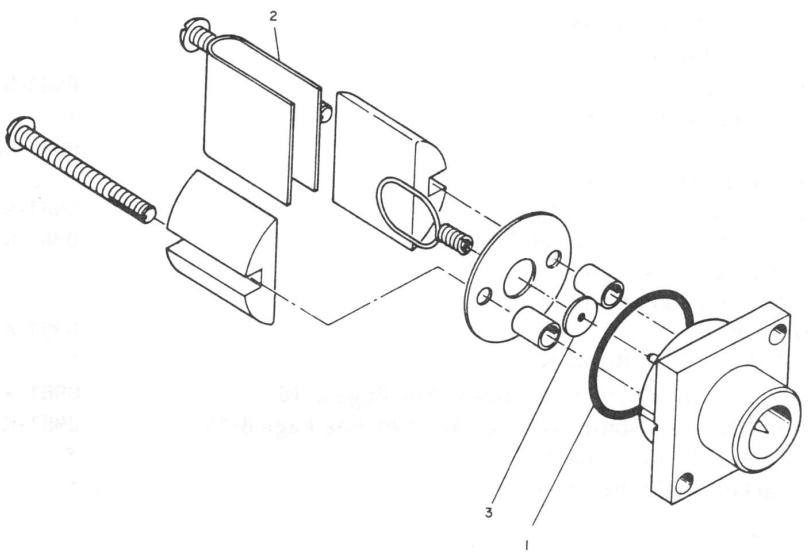

Figure 8-12. Cold Cathode Gauge

VALVE BLOCK

Item	Description	Varian Ordering Number
1	Valve Block	0981-K3033-001
2	O-Ring, Parker No. 2-113, Buna-N	*
3	Adapter	0981-K3378-001
4	Valve, Vent (L5)	0981-6265-71-006
5	(Not Used)	
6	Bracket	0981-K3377-001
7	Filter	0981-6490-71-015
8	Screw, 10-32 x 5/8 inch	
9	O-Ring, Parker 2-110, Buna-N	*
10	Washer (Special for 531 T.C. Gauge)	0981-84120-098
11	531 Thermocouple Gauge	0531-F0472-301
12	Plug	0981-K3379-001
13	O-Ring, Parker 2-111, Buna-N	*
14	Blank Port Flange	0981-K3380-001
15	Standard Leak Assembly 936-60 & 65 (L4)	0981-K3039-301
16	Standard Leak Assembly 936-70 (L4)	0981-K4248-301
17	Standard Leak Element	0981-K3264-301
18	(Not Used)	
19	Screw, 10-32 x 1-3/4 inch	
20	Compression Cap	0981-82847-301
21	O-Ring Follower	0981-82848-001
22	O-Ring, Parker 2-216, Buna N	*
23	Test Port Nut	0981-83488-001
24	Manifold (inlet)	0981-K3040-301
25	Screw, 10-32 x 5/8 inch	
26	O-Ring, Parker 2-215, Buna-N	*
27	Screw, 1/4 x 3/4 inch	
28	Blank-Port Flange	0981-K3036-001
29	O-Ring, Parker 2-220, Buna-N	*
30	Valve	0981-6265-71-011
31	Sleeve, Imperial 60-F/-1/4	
32	Gross Leak Valve Assembly (L6)	0981-K3038-301
33	Gross Leak Valve Assembly 936-70 (L6)	0981-K4254-301
34	Screw, 1/4-20 x 1-1/4 inch	
35	O-Ring, Parker 2-227, Buna-N	*
36	Back-Up Ring	0981-K3037-001
37	O-Ring, Parker 2-218, Buna-N	*
38	Trim Assembly, with Bronze Bellows See Page 8-16	0981-K3035-001
	Trim Assembly, with Stainless Steel Bellows See Page 8-16	0981-K4853-301
39	O-Ring, Parker 2-215, Buna-N	*
40	O-Ring, Parker 2-222, Buna-N	*

*Furnished in O-ring Kit, 0981-K4372-801.

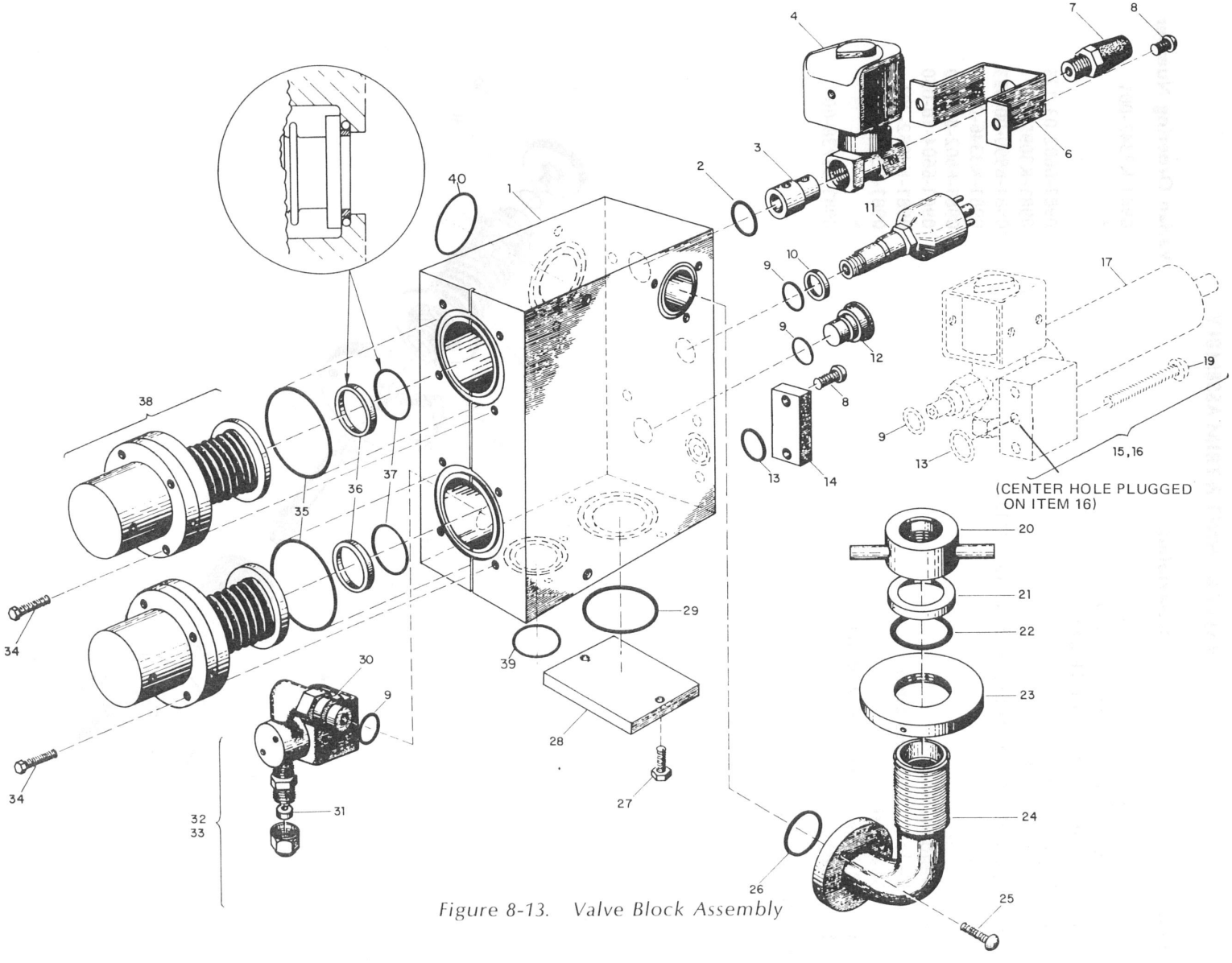

Figure 8-13. Valve Block Assembly

VALVE BONNET & TRIM ASSEMBLY

Item	Description	Varian Ordering Number
1	Air Cylinder Body	0981-K3347-001
2	O-Ring, Parker 2-227, Buna N	*
3	Nut, Stop, ESNA 24 NTE-040	
4	Piston, Cup	0981-6602-03-125
5	Stem, Assembly	0981-K3095-301
6	Quad Ring, Minnesota Rubber Q7/8012	*0981-6990-00-025
7	Top Plate	0981-K3346-001
8	Spring	0981-6602-85-050
9	Bellows, Bronze	0981-6604-10-050
	Bellows, Stainless Steel	0981-K4852-301
10	Seal Disc	0981-K3349-001
11	O-Ring, Parker 2-012, Buna N	*
12	Washer	0981-85238-001

*Furnished in O-ring Kit, 0981-K4372-801.

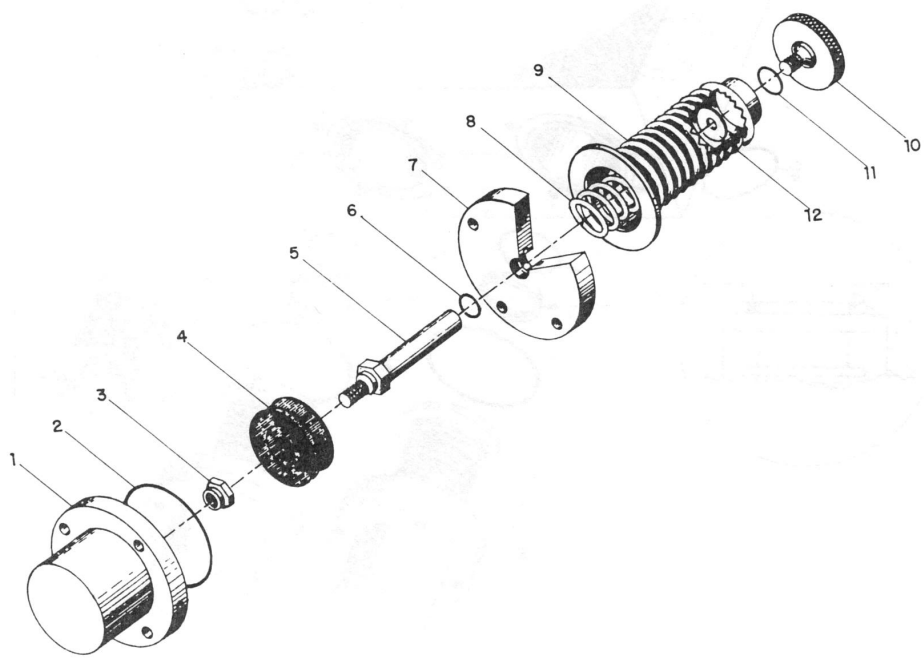

Figure 8-14. Valve Bonnet and Trim Assembley

DIFFUSION PUMP

Item	Description	Varian Ordering Number
1	Spring, Pump Jet Retaining	0181-6602-85-290
2	Diffusion Pump Jet Assembly	0181-85485-301
3	O-Ring, Parker 2-235, Buna-N	*
4	Diffusion Pump complete	0981-K3026-301
5	Heater Block	0181-82247-001
6	Silicone Gasket	0181-84687-001
7	Washer Split Lock No. 10	
8	Nut, Hex, No. 10-24	
9	Nut, Hex, No. 10-24	
10	Reflector	0181-85254-301
11	Washer Split Lock No. 10 (same as 7)	
12	Nut, Acorn, No. 10-24	
13	Clip, Heater Ring	0181-6480-18-010
14	Washer, External Tooth Lock No. 4	
15	Screw No. 6-32 x 3/16 inch	
16	Heater Cartridge, 110 volt	0181-6473-01-100
	Heater Cartridge, 220 volt	0181-6473-01-125
17	Washer, External Tooth Lock No. 4	
18	Screw, No. 4-40 x 3/16 inch	
19	Santovac 5, 65cc bottle (not shown)	0981-6954-05-002

*Furnished in O-ring Kit, 0981-K4372-801.

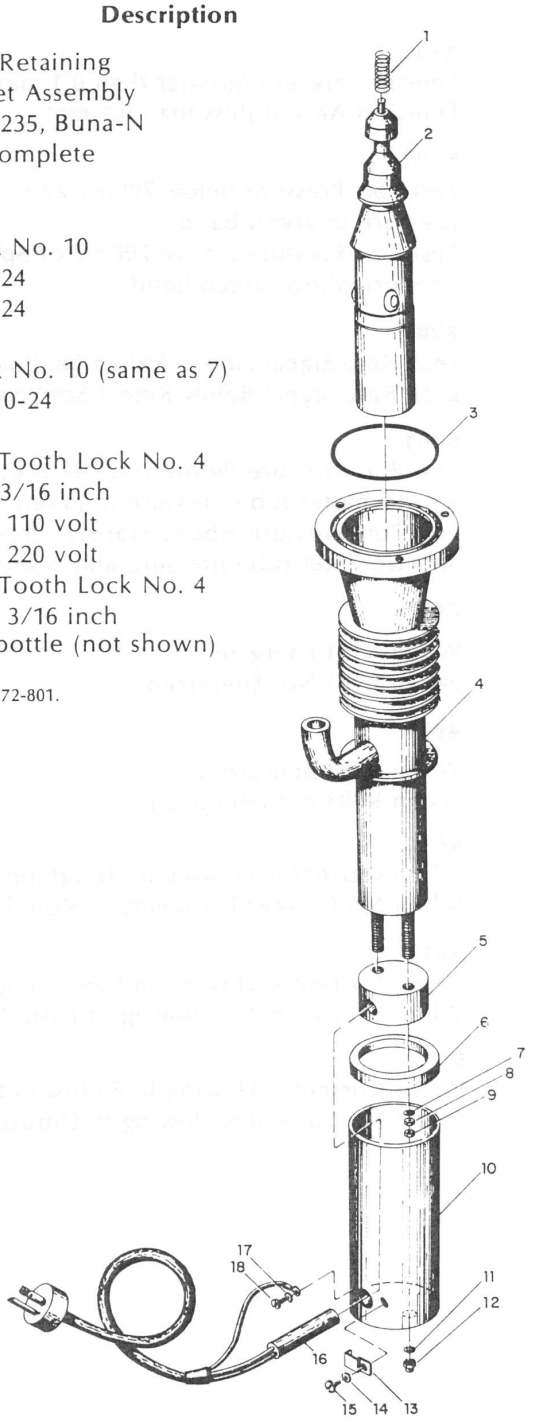

Figure 8-15. Diffusion Pump

POWER CONTROL AND CONTROL LOGIC

Relay Truth Table

	K101
Energized	Emission Present (greater than 0.1 ma)
Normal (shown)	Emission Absent (less than 0.1 ma)
	K202
Energized	Test Port Pressure Below 700mT and Spectrometer tube pressure in green band
Normal (shown)	Test Port Pressure Above 700mT or Spectrometer tube pressure above green band
	K203
Energized	Leak Rate Signal Above Reject Set Point
Normal (shown)	Leak Rate Signal Below Reject Set Point
	K204
Energized	Test Port Pressure Below Transfer Pressure Setting and Spectrometer tube pressure in green band
Normal (shown)	Test Port Pressure Above Transfer Pressure Setting or Spectrometer tube pressure above green band.
	K601
Energized	When K101 Energized
Normal	When K101 Not Energized
	K604
Energized	When K203 energized
Normal (shown)	When K203 not energized
	K611
Energized	When Current is Flowing in Roughing Pump Motor
Normal (shown)	When No Current is Flowing in Roughing Pump Motor
	K612
Energized	When Current is Flowing in Fore-Pump Motor
Normal (shown)	When No Current is Flowing in Fore-Pump Motor
	K613
Energized	When Current is Flowing in Diffusion Pump Heater
Normal (shown)	When No Current is Flowing in Diffusion Pump Heater

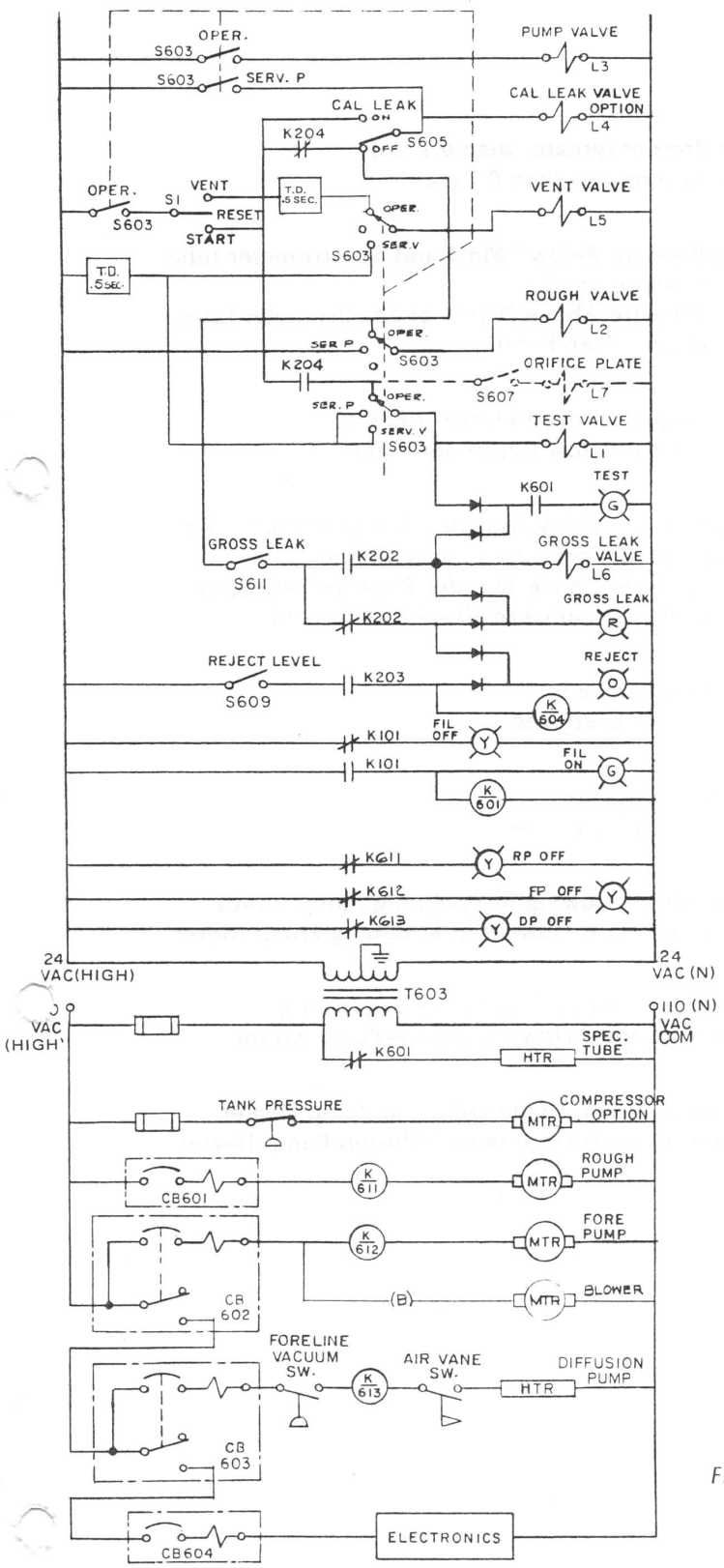

Figure 8-16 Power Control and Control Logic (936-60,65)

POWER CONTROL AND CONTROL LOGIC

Relay Truth Table

	K101
Energized	Emission Present (greater than 0.1 ma)
Normal (shown)	Emission Absent (less than 0.1 ma)
	K202
Energized	Test Port Pressure Below 700mT and Spectrometer tube pressure in green band
Normal (shown)	Test Port Pressure Above 700mT or Spectrometer tube pressure above green band
	K203
Energized	Leak Rate Signal Above Reject Set Point
Normal (shown)	Leak Rate Signal Below Reject Set Point
	K204
Energized	Test Port Pressure Below Transfer Pressure Setting and Spectrometer tube pressure in green band
Normal (shown)	Test Port Pressure Above Transfer Pressure Setting or Spectrometer tube pressure above green band
	K601
Energized	When K101 Energized
Normal	When K101 Not Energized
	K604
Energized	When K203 Energized
Normal (shown)	When K203 Not Energized
	K611
Energized	When Current is Flowing in Roughing Pump Motor
Normal (shown)	When No Current is Flowing in Roughing Pump Motor
	K612
Energized	When Current is Flowing in Fore-Pump Motor
Normal (shown)	When No Current is Flowing in Fore-Pump Motor
	K613
Energized	When Current is Flowing in Diffusion Pump Heater
Normal (shown)	When No Current is Flowing in Diffusion Pump Heater

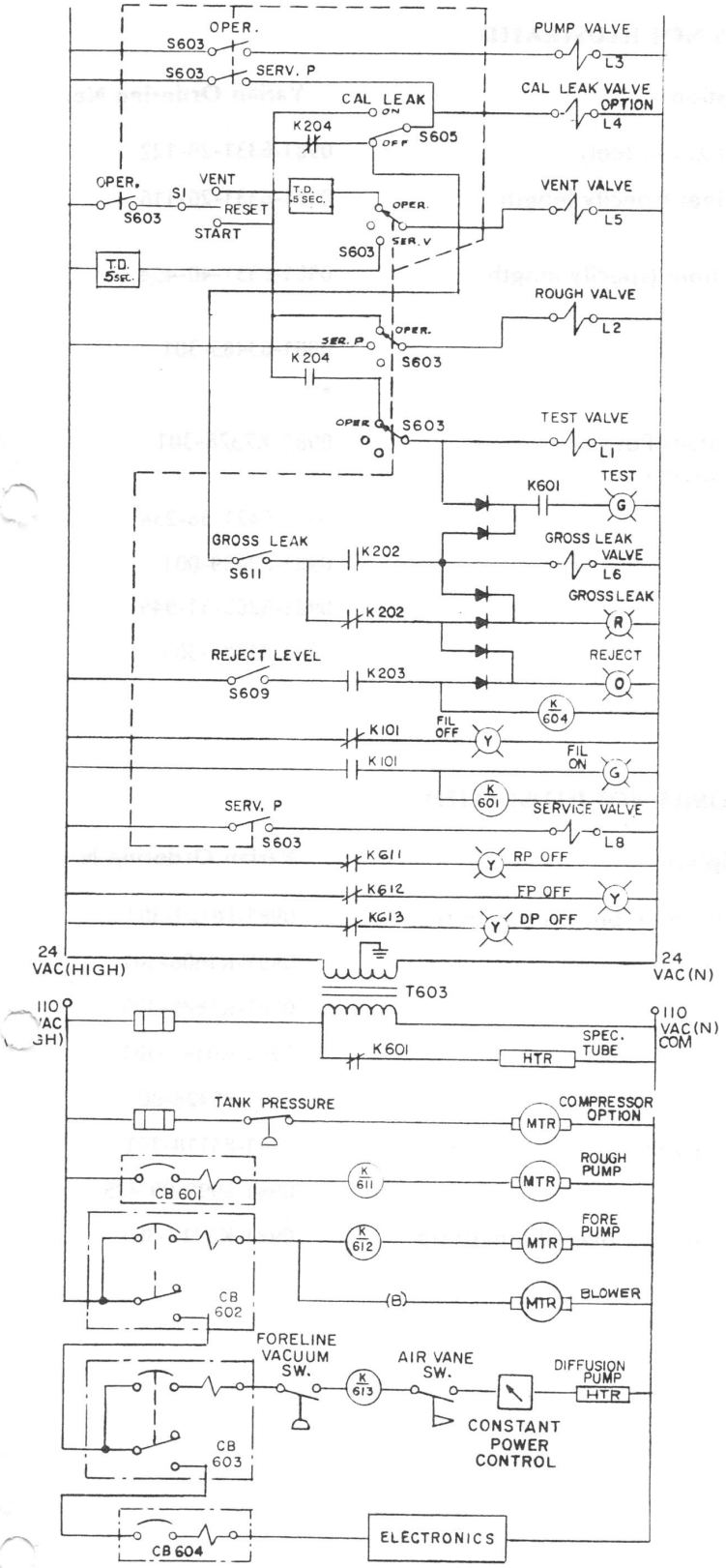

Figure 8-17 Power Control and Control Logic (936-70)

PARTS NOT ILLUSTRATED

Item	Description	Varian Ordering No.
1	Tygon Tubing (foreline) (specify length in feet)	0981-6331-20-122
2	Tygon Tubing (5.6 CFM roughing line) (specify length in feet)	0981-6331-20-116
3	Tygon Tubing (10.6 CFM roughing line) (specify length in feet)	0981-6331-40-454
4	Cold trap reservoir (936-60, 65)	0981-83485-301
5	O-Ring for item 4, Parker 2-256	*
6	Circuit Board, Diffusion Pump Constant Power Controller (see figure 8-18 for schematic)	0981-K7376-301
7	START/VENT switch (S-1)	0981-6421-36-234
8	Test Port Plug	0981-83489-001
9	Solenoid Orifice Ass'y	0981-6265-31-945
10	Throttling Valve Disc	0981-83784-301

ACCESSORIES NOT ILLUSTRATED

Item	Description	Varian Ordering No.
1	Calibrated Leak (integral helium reservoir, fits test port)	0981-F8473-301
2	Tuning Leak (with case) (936-70)	0991-K1608-301
3	Superprobe (936-70)	0991-K1889-305
4	Helium Spray Probe Kit	0981-K0167-301
5	Inlet Adapter Kit (12 sizes)	0991-86428-801
6	Baseplate, 14" diameter, stainless steel	0981-85118-301
7	Additional 936 manual	0981-6999-09-425
8	Extension cable, leak indicator (specify overall length up to 25 feet maximum)	0981-K3317-301

*Furnished in O-ring Kit, 0981-K4372-801.

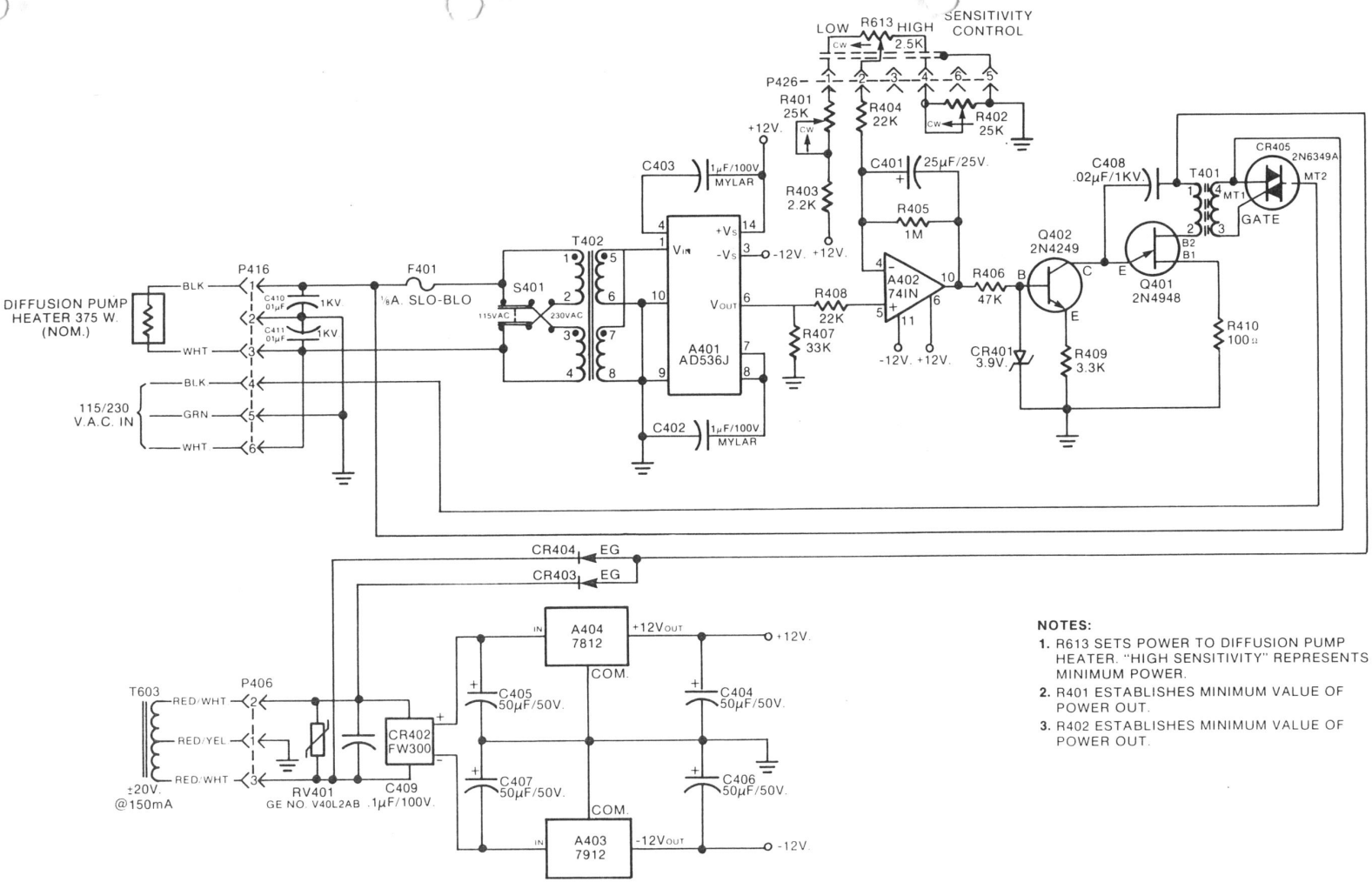

NOTES:

1. R613 SETS POWER TO DIFFUSION PUMP HEATER. "HIGH SENSITIVITY" REPRESENTS MINIMUM POWER.
2. R401 ESTABLISHES MINIMUM VALUE OF POWER OUT.
3. R402 ESTABLISHES MINIMUM VALUE OF POWER OUT.

Figure 8-18. Diffusion Pump Constant Power Control (936-70 Only) 0981-K7376-301

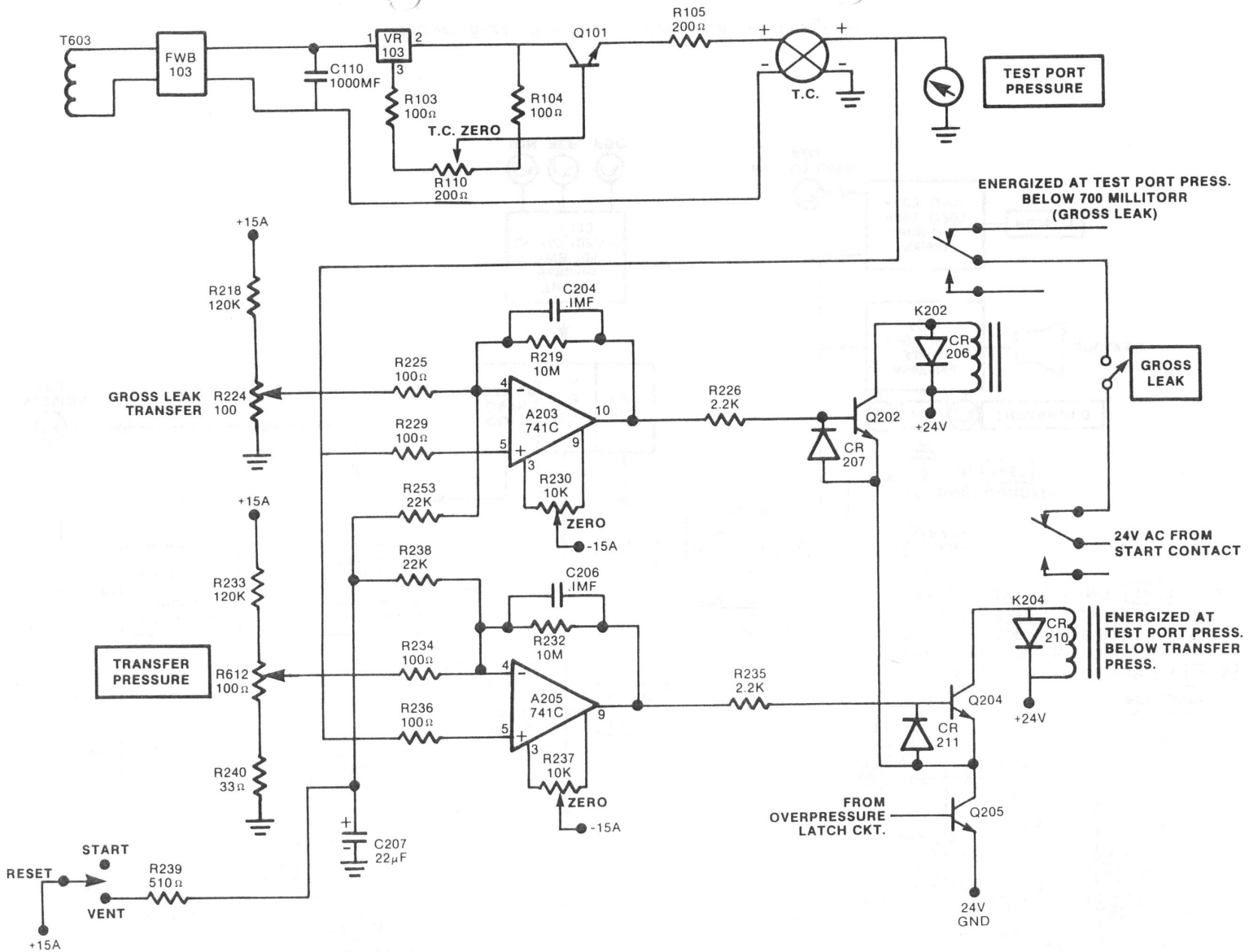

Figure 8-22. T.C. P.S., T.C. Meter & Transfer Circuit

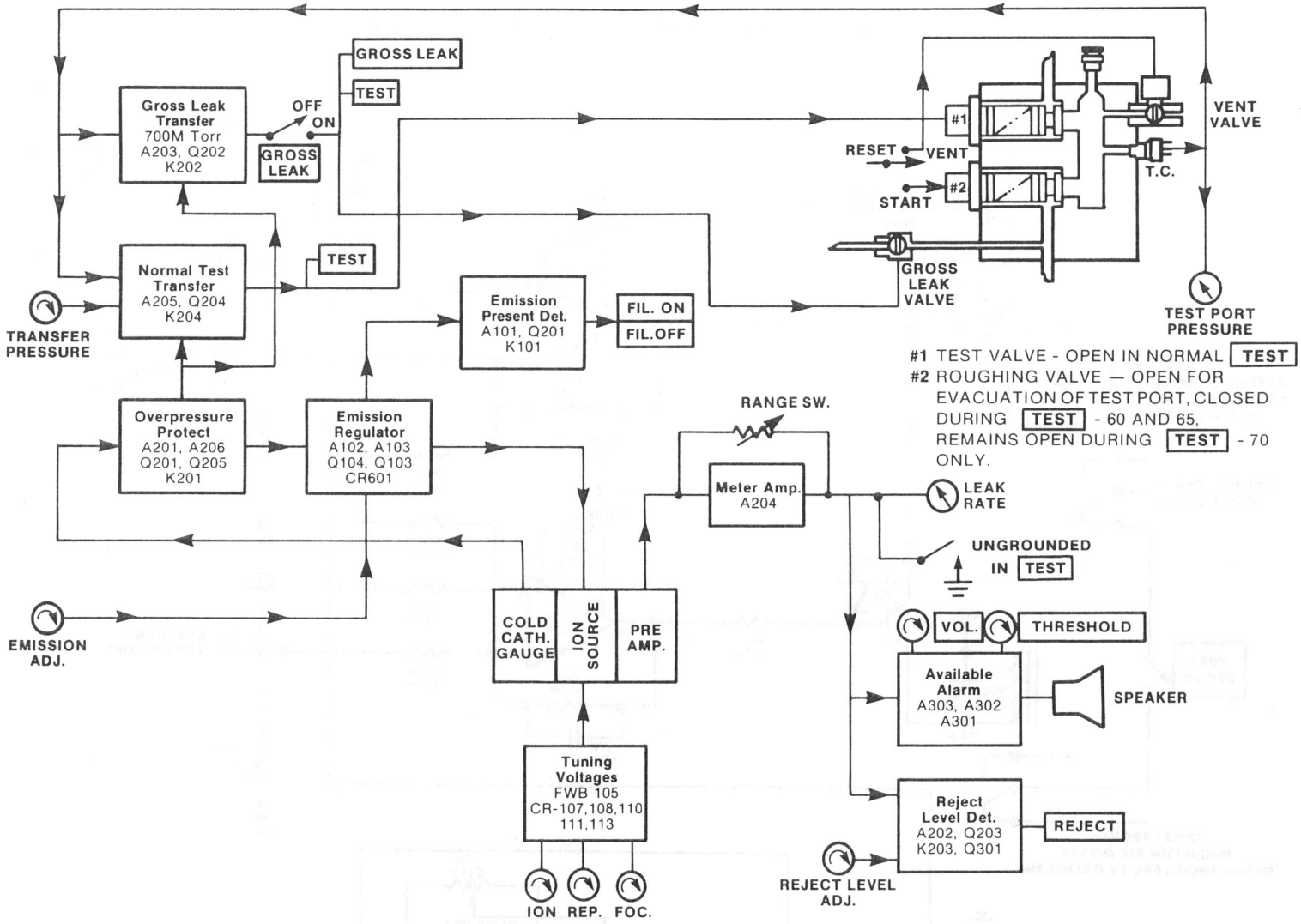

Figure 8-21. 936 Leak Detector Block Diagram

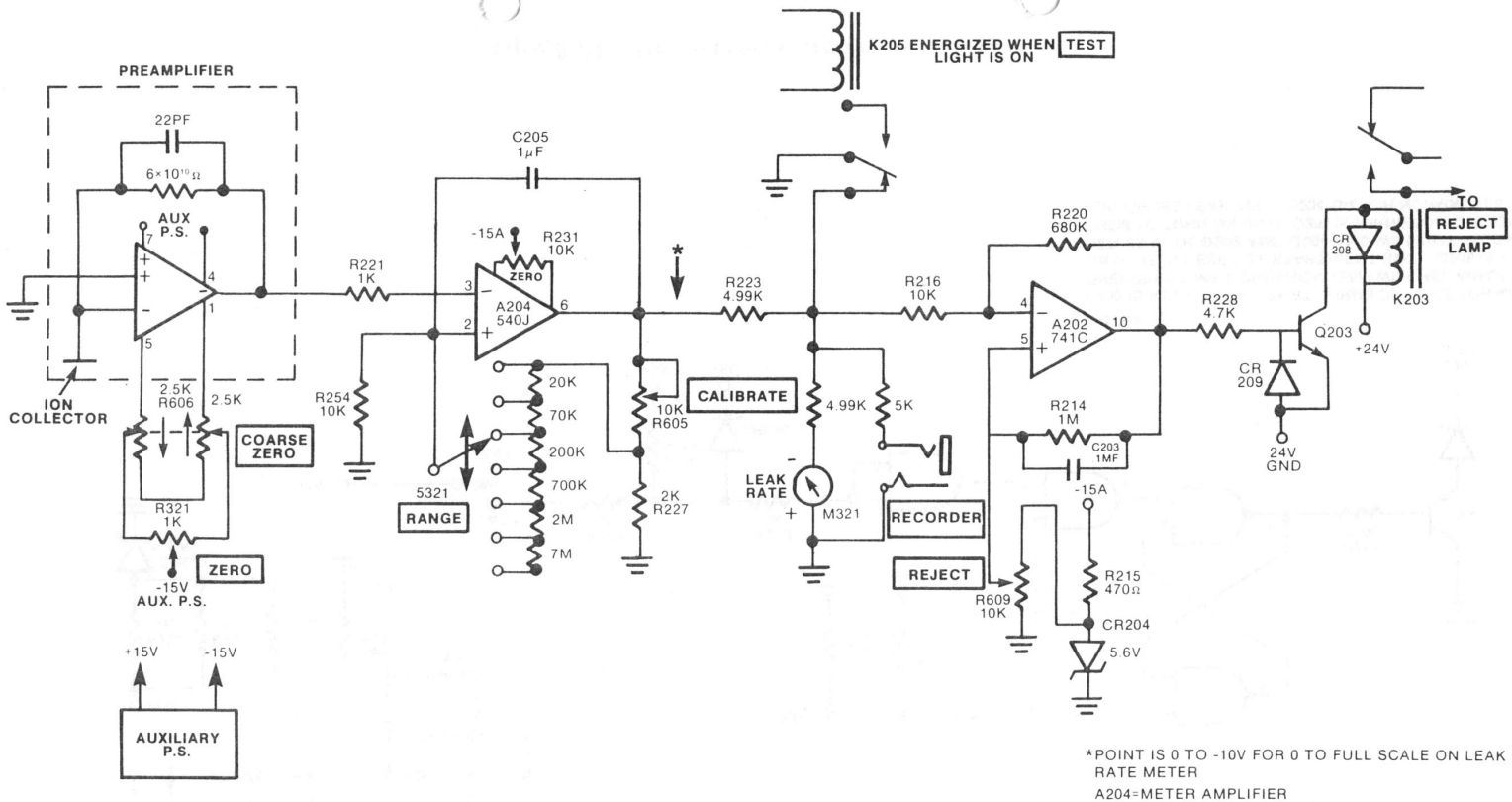

Figure 8-23. 936 Leak Rate Meter/Reject Level Circuit

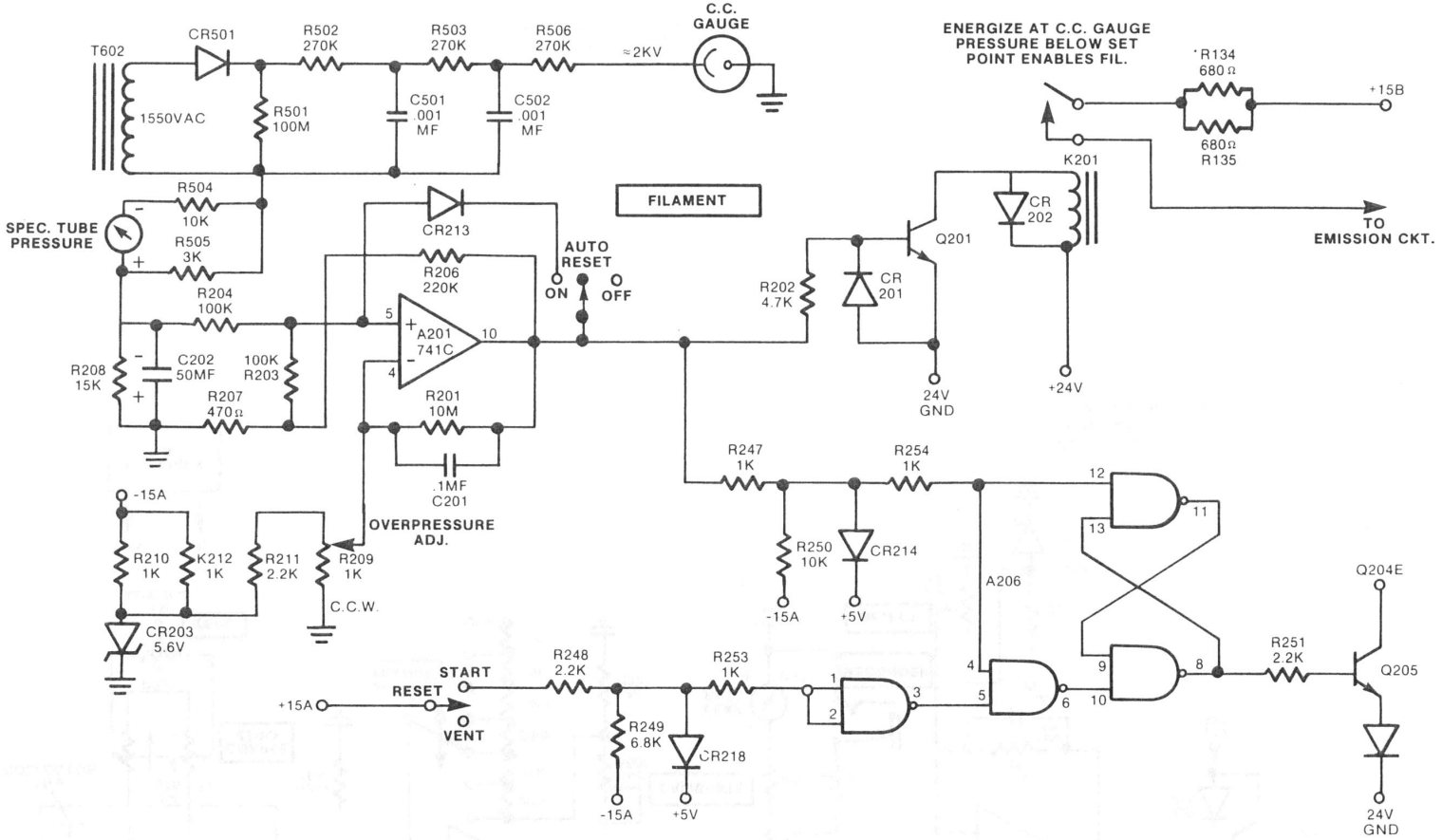

NOTES:

A206 IS A LATCH CKT. THAT TURNS OFF Q205 FOR AN OVERPRESSURE CONDITION. Q205 WILL REMAIN OFF UNTIL IT IS RESET BY START/VENT SW. Q205 IS IN SERIES WITH Q202 AND Q204 AND WILL NOT ALLOW THEM TO TURN ON UNTIL Q205 IS TURNED ON. Q202 ON FOR GROSS LEAK TEST. Q204 ON FOR NORMAL TEST.

Figure 8-24. 936 Overpressure Protection Circuit

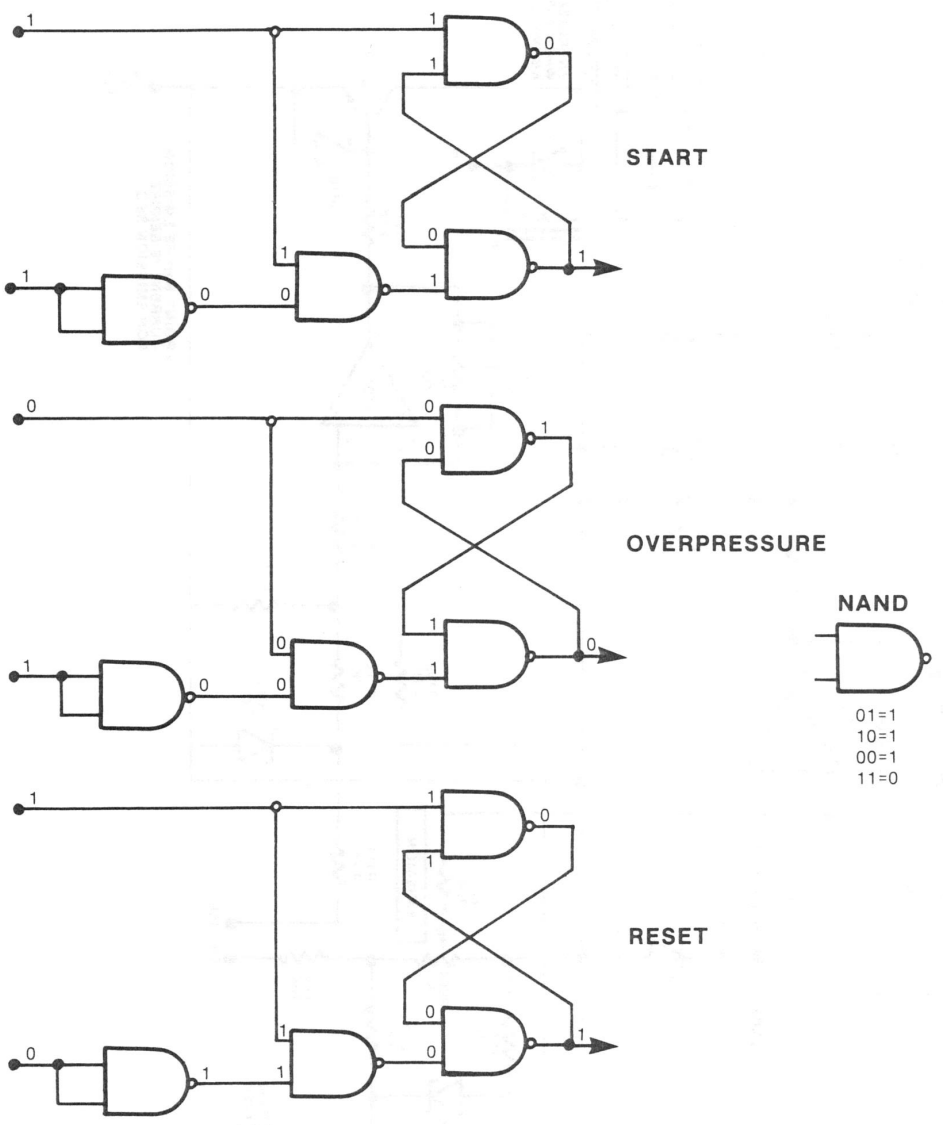

Figure 8-25. Logic Latch Circuit

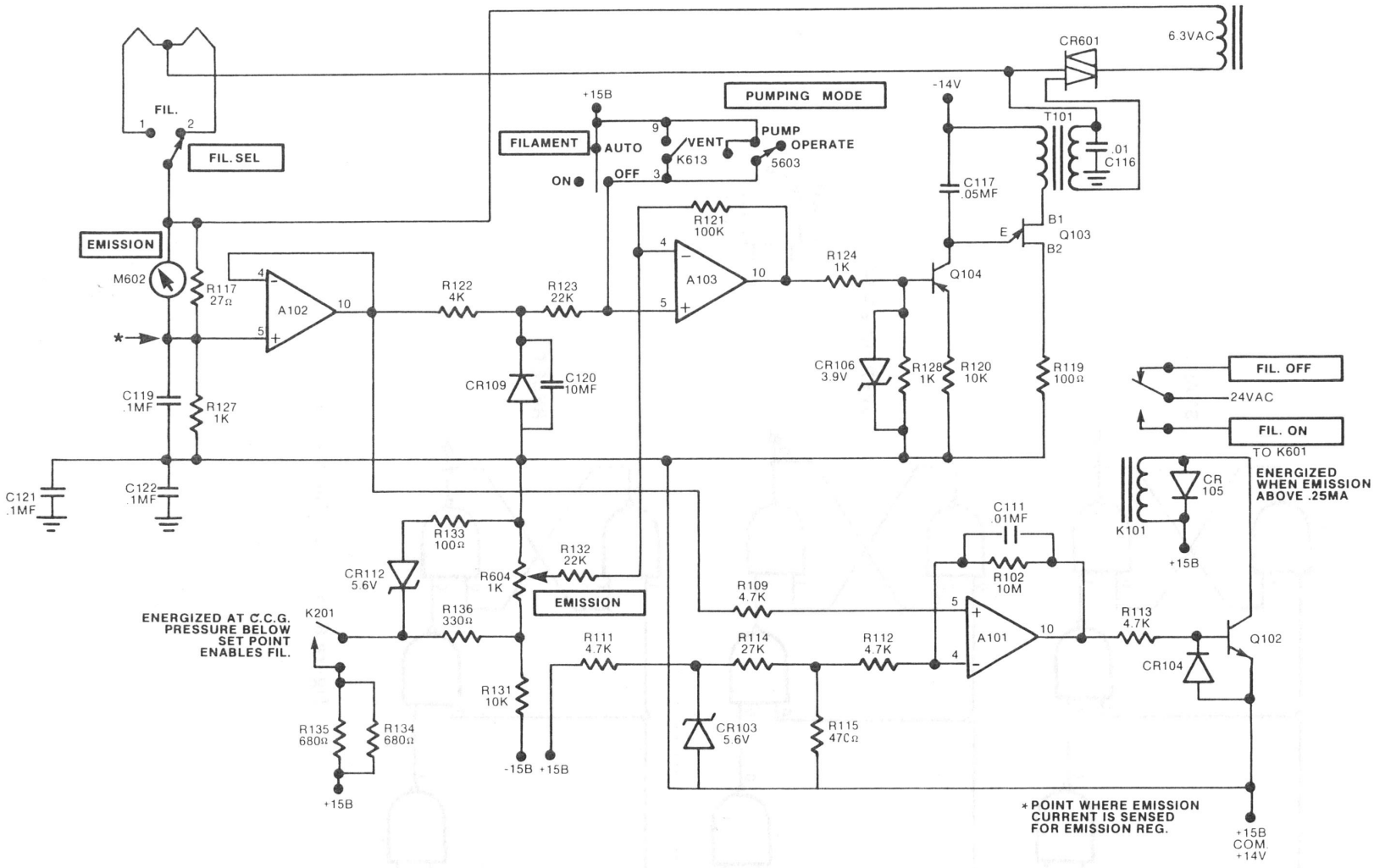

Figure 8-26. Emisssion Regulator & Emission Present Det. Ckt.

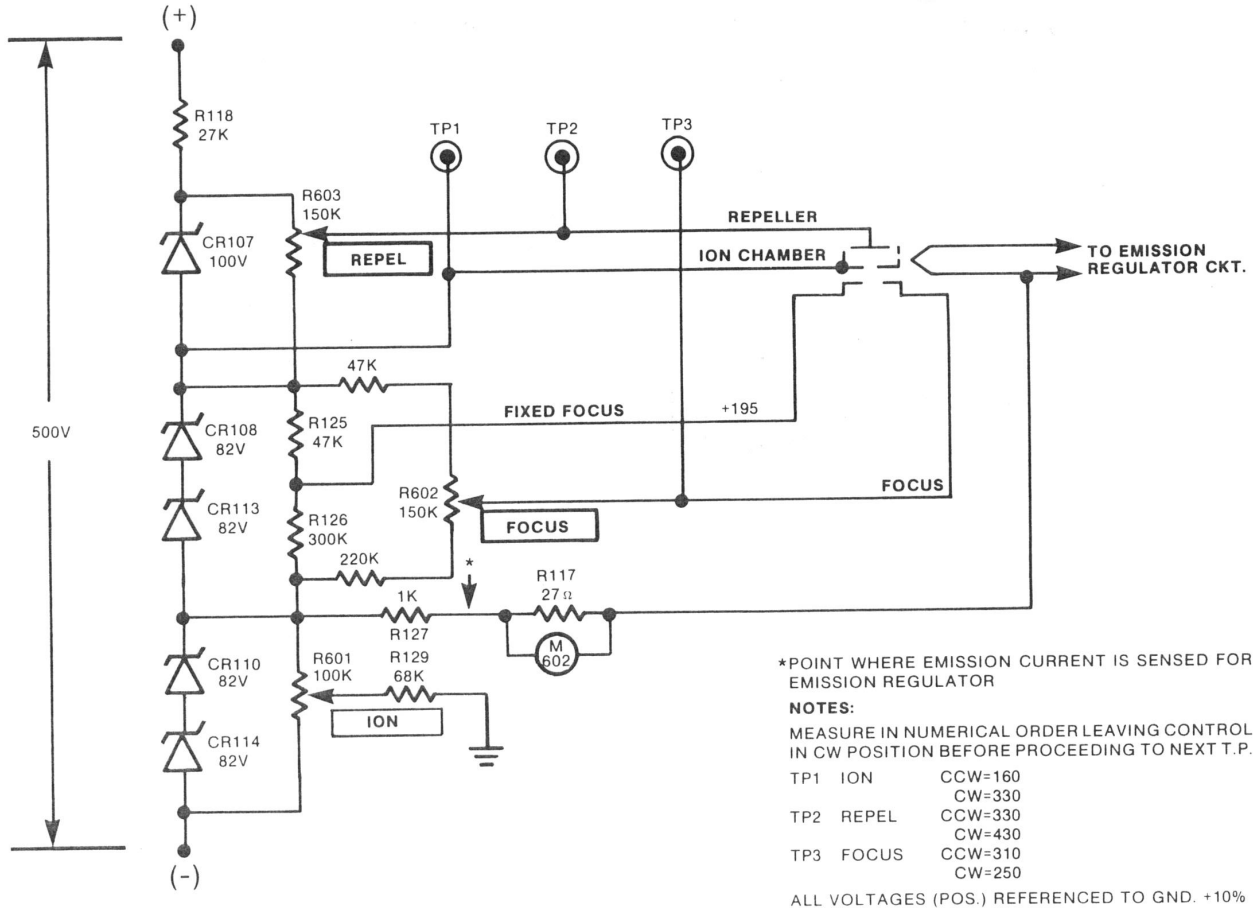

Figure 8-27. Tuning Voltages/Emission Meter Circuit